"Apollo"® Valves

Actuation

section R

aalberts integrated piping systems

SECTION R
ACTUATION

DESCRIPTION	PAGE
PNEUMATIC RACK AND PINION ACTUATORS	
Apollo AD (Double Acting) & AS (Spring Return), Sizes 0012 thru 4000	R 3-26
Apollo Rack and Pinion (Stainless Steel)	R 27-32
Scotch Yoke, G-Series	R 33-37
ELECTRIC ACTUATORS	
AE Series	R 38-41
CS & CL Series	R 42-45
LB Series	R 46-48
ACCESSORIES	
Apollo Solenoid Valves, Stonel & Moniteur Limit Switch Assemblies	R 49-52
VRC Positioners	R-53
PMV Positioners	R-54
Proximity Valve Position Monitoring System	R-55
OSHA Lockout Target Device	R-56
Apollo Ball Valve Information	R 57-62
Apollo Butterfly Valve Information	R 63-65

AD & AS SERIES

GENERAL SPECIFICATIONS

TORQUE RANGE

- Double-Acting: 119 to 38510 lbf-in (13.4 to 4338 Nm) at 80 psig (5.5 barg)
- Spring-Return: 41 to 15867 lbf-in (5 to 1793 Nm) spring end torque at maximum spring set.

PRESSURE RANGE

- Double-Acting: 29 to 120 psig (0.2 to 8.3 barg)
- Spring-Return:
  87 to 120 psig (6 to 8.3 barg), with maximum spring set
  43.5 to 120 psig (3 to 8.3 barg), reduced spring quantity

PRESSURE MEDIA

- Air, dry, or lubricated and inert gases
- Dew point at least 10K below ambient temperature
- For sub-zero applications, take appropriate measures
- Mentioned pressure levels are "gauge pressures". Gauge pressure is equal to absolute pressure minus atmospheric pressure.

CYCLE LIFE

- Normal working life is 500,000 cycles according to EN15714-3, where 1 cycle is 1 open stroke and 1 close stroke.

FINISH

- Body: Chromated and polyurethane powder coated
- End Caps: Chromated and polyurethane powder coated
- Pistons: Chromated
- Pinion: Hard anodized
- Fasteners: Stainless steel or Deltatone® coated

LUBRICATION

- Castrol high temperature grease (or equivalent)

TEMPERATURE RANGE

- Standard: -4°F to 176°F (-20°C to 80°C)
- Option:
  Low temperature: -40°F to 176°F (-40°C to 80°C)
  High temperature: +14°F to 250°F (-10°C to 120°C)

ANGLE OF ROTATION

- Factory set at 90°
- Adjustable range:
  Size 0025 to 0600: -5° to +10° and +80° to 95°
  Size 0950 to 4000: -3° to +10° and +80° to 93°

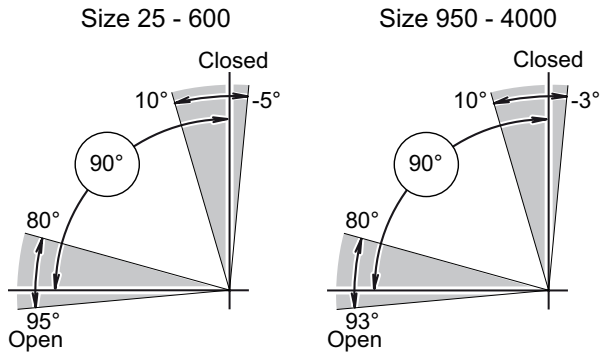

COMPLIANCE TO INTERNATIONAL STANDARDS

- Valve flange: ISO 5211
- Solenoid flange: VDE/VDI 3845 (NAMUR)
- Accessory flange: VDE/VDI 3845 (NAMUR)
- European Directives: ATEX, PED, & Machinery Directive
- SIL 3 rated according to IEC 61508-1-7:2010
- EAC Custom Union: Compliance to Russian TR010 & TR012

AD & AS SERIES

WEIGHTS & CYCLE TIME

ACTUATOR WEIGHTS

ACTUATOR MODEL	DOUBLE ACTING		SPRING RETURN SPRING SET N=6	
	LB.	KG	LB.	KG
0012	1.3	0.6	1.5	0.7
0025	3.1	1.4	3.5	1.6
0040	4.6	2.1	5.1	2.3
0065	6.2	2.8	7.3	3.3
0100	7.7	3.5	9.5	4.3
0150	10.8	4.9	14.6	6.6
0200	13.2	6.0	18.3	8.3
0350	22	10.2	32	14.5
0600	44	20	57	26
0950	58	26	89	41
1600	91	41	137	62
2500	141	64	221	100
4000	226	103	325	147

CYCLE TIME (SEC)

ACTUATOR MODEL	SPRING RETURN		DOUBLE ACTING	
	OPENING STROKE	CLOSING STROKE	OPENING STROKE	CLOSING STROKE
12	0.4	0.4	0.4	0.4
25	0.5	0.4	0.5	0.4
40	0.6	0.5	0.6	0.5
65	0.7	0.5	0.6	0.6
100	0.8	0.6	0.8	0.7
150	1	0.8	0.9	0.8
200	1.3	0.9	1	1
350	1.9	1.3	1.4	1.5
600	3.2	1.9	2.2	2.2
950	6.6	2.2	2.4	2
1600	10.6	3.5	3.6	3.3
2500	16.9	5.7	5.8	5.2
4000	29.1	9.2	9.2	9

Test conditions:

1. Solenoid with flow capacity: 0.6 m3/hr.
2. Pipe diameter: 6 mm
3. Medium: clean air
4. Supply pressure: 5.5 barg/80 psig
5. Load: with average load
6. Stroke: 90°
7. Temperature: Room temperature

ACTUATOR AIR VOLUMES AND CONSUMPTION

ACTUATOR MODEL	ACTUATOR VOLUMES (CU.IN.)			CONSUMPTION PER STROKE (IN CU.IN., PRESSURE IN PSIG)					
				OUTWARD STROKE			INWARD STROKE		
				DOUBLE ACTING & SPRING RETURN			DOUBLE ACTING ONLY		
	CENTRAL CHAMBER[1]	END CAP CHAMBER[2]	DISPLACED VOLUME[3]	40 PSIG	80 PSIG	120 PSIG	40 PSIG	80 PSIG	120 PSIG
12	3.1	3.7	2.5	11	19	28	13	23	33
25	8.5	12.2	4.7	28	52	75	38	72	106
40	15.9	23	8.9	53	96	140	71	133	196
65	24	34	13.5	81	148	215	107	200	294
100	36	53	19.9	118	216	314	165	310	455
150	58	47	32	192	352	512	163	293	424
200	76	64	44	255	466	676	220	397	573
350	131	115	76	436	796	1157	392	709	1025
600	222	201	129	742	1354	1967	683	1237	1790
950	301	279	196	1025	1854	2682	966	1735	2505
1600	484	447	328	1662	2997	4331	1560	2792	4024
2500	769	728	508	2630	4751	6873	2515	4523	6530
4000	1324	1159	825	4477	8130	11782	4022	7219	10416

Notes:
[1] For double-acting and spring-return. Pistons at 90° outward position.
[2] Only for double-acting. Pistons at 0° inward position.
[3] Stroke is 90°.

CENTRAL AIR CHAMBER VOLUME
DOUBLE-ACTING AND SPRING-RETURN

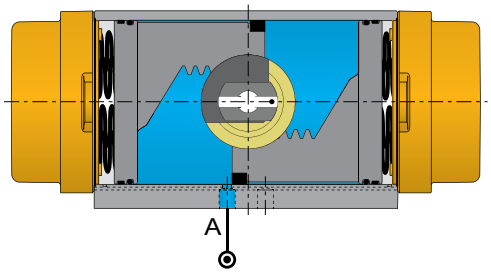

END CAP AIR CHAMBER VOLUME
DOUBLE-ACTING ONLY

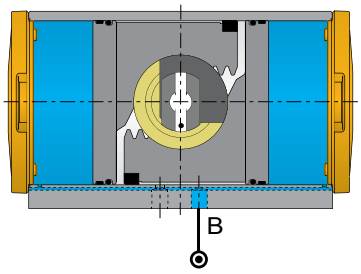

AD & AS SERIES

PARTS LIST - SIZE 0012

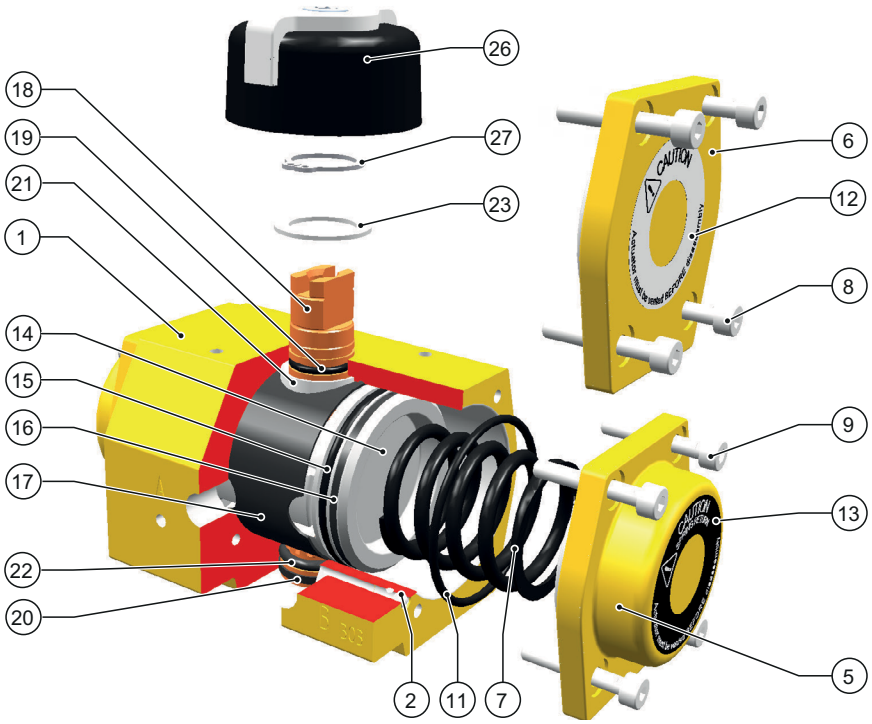

PART	QTY	NOTES	DESCRIPTION	MATERIAL
1	1	2	House	Extruded aluminum alloy
2	2	1	B-port ball	Steel
5	2	2	End cap SR	Cast Aluminum alloy
6	2	2	End cap DA	Cast Aluminum alloy
7	Max. 2	5	Springs	Spring steel
8	8		End cap screw DA	Stainless steel
9	8		End cap screw SR	Stainless steel
11	2	1	O-ring end cap	Nitrile rubber
12	2		Warning sticker DA	Polyester
13	2		Warning sticker SR	Polyester
14	2	3	Piston	Cast Aluminum alloy
15	2	1	Bearing piston	PTFE 25% carbon-filled
16	2	1	O-ring piston	Nitrile rubber
17	1	1	Guide band	Nylatron
18	2	4	Pinion	High grade aluminum
19	1	1	Bearing pinion top	POM
20	1	1	Bearing pinion bottom	POM
21	1	1	O-ring pinion top	Nitrile rubber
22	1	1	O-ring pinion bottom	Nitrile rubber
23	1	1	Thrust bearing pinion	POM, black UV stabilized
26	1		Indicator assembly	ABS + stainless steel screw
27	1	1,6	Circlip	Spring steel

Notes:
1. Included in service kit.
2. Chromated and polyurethane powder coated.
3. Chromated.
4. Hard anodized.
5. Electrophoretic coated.
6. Deltatone® coated.

AD & AS SERIES

PARTS LIST - SIZES 0025 TO 0600

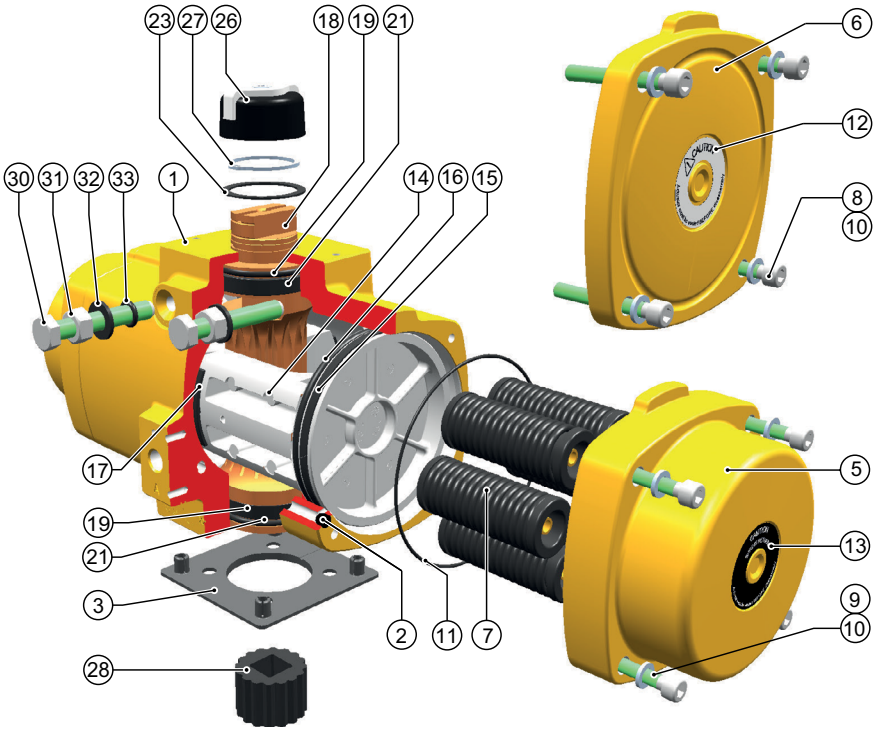

PART	QTY	NOTES	DESCRIPTION	MATERIAL
1	1	2	House	Cast Aluminum alloy
2	2	1	B-port seal	Nitrile rubber
3	1		Center plate (option)	Nylon PA6, Black
5	2	2, 8	End cap SR (DA)	Cast Aluminum alloy
6	2	2, 8	End cap DA	Cast Aluminum alloy
7	Max. 12	5	Spring cartridge	Spring steel
8	8		End cap screw DA	Stainless steel
9	8		End cap screw SR	Stainless steel
10	8		End cap screw washer	Stainless steel
11	2	1	O-ring end cap	Nitrile rubber
12	2		Warning sticker DA	Polyester
13	2		Warning sticker SR	Polyester
14	2	3	Piston	Cast Aluminum alloy
15	2	1	Bearing piston	PTFE 25% carbon-filled
16	2	1	O-ring piston	Nitrile rubber
17	2	1	Bearing strip piston rack	POM
18	2	4	Pinion	High grade aluminum
19	2	1	Bearing pinion	POM
21	2	1	O-ring pinion	Nitrile rubber
23	1	1	Thrust bearing pinion	POM, black UV stabilized
26	1		Indicator assembly	ABS + stainless steel screw
27	1	1, 6	Circlip	Spring steel
28	1	7	Drive insert	Aluminum
30	2		Limit stop screw	Stainless steel
31	2		Limit stop nut	Stainless steel
32	2	1	Limit stop washer	PA66
33	2	1	O-ring limit stop	Nitrile rubber

Notes:
1. Included in service kit.
2. Chromated and polyurethane powder coated.
3. Chromated.
4. Hard anodized.
5. Electrophoretic coated.
6. Deltatone® coated.
7. Anodized
8. High end caps for double-acting & spring-return models up to size 0100.
   Low end caps for double-acting models for sizes 0150 & larger.

Customer Service (704) 841-6000 www.apollovalves.com
WE RESERVE THE RIGHT TO CHANGE BOX QUANTITIES
aalberts integrated piping systems

AD & AS SERIES

PARTS LIST - SIZES 0950 TO 2500

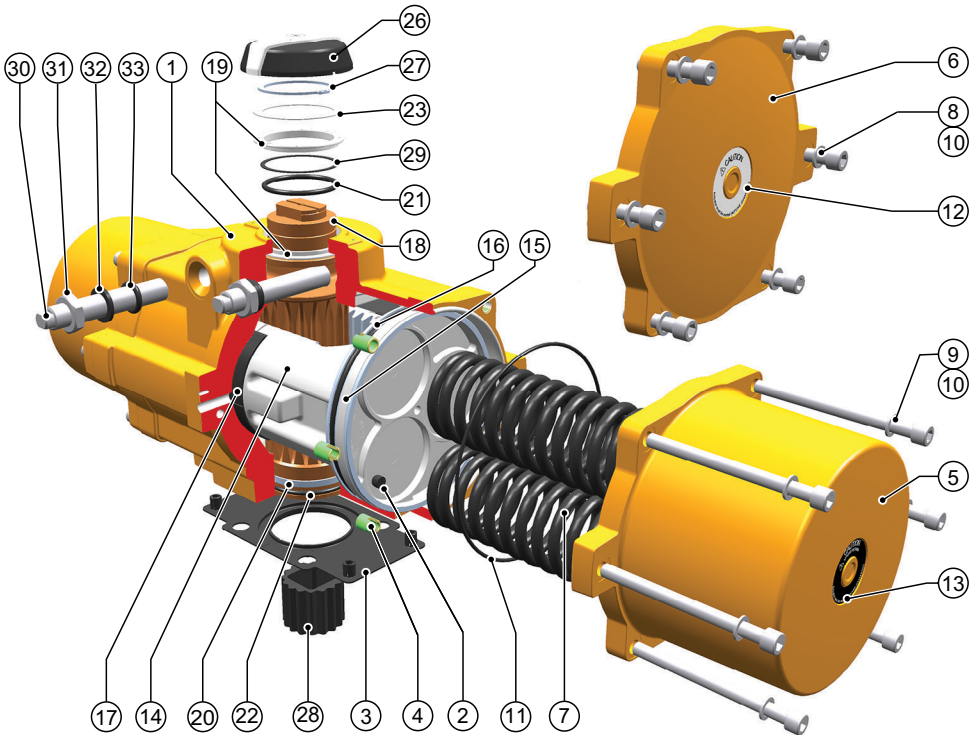

PART	QTY	NOTES	DESCRIPTION	MATERIAL
1	1	2	House	Cast Aluminum alloy
2	2	1	B-port seal	Nitrile rubber
3	1		Center plate (option)	Nylon PA6, Black
4	12-Aug	8	Thread insert	Steel
5	2	2	End cap SR	Cast Aluminum alloy
6	2	2	End cap DA	Cast Aluminum alloy
7	Max. 6	5	Springs	Spring steel
8	12-Aug	8	End cap screw DA	Stainless steel
9	12-Aug	8	End cap screw SR	Stainless steel
10	12-Aug	8	End cap screw washer	Stainless steel
11	2	1	O-ring end cap	Nitrile rubber
12	2		Warning sticker DA	Polyester
13	2		Warning sticker SR	Polyester
14	2	3	Piston	Cast Aluminum alloy
15	2	1	Bearing piston	PTFE 25% carbon-filled
16	2	1	O-ring piston	Nitrile rubber
17	2	1	Bearing strip piston rack	POM
18	1	4	Pinion	High grade aluminum
19	2	1	Bearing pinion top	POM
20	1	1	Bearing pinion bottom	POM
21	1	1	O-ring pinion top	Nitrile rubber
22	1	1	O-ring pinion bottom	Nitrile rubber
23	1	1	Thrust bearing pinion	POM, black UV stabilized
26	1		Indicator assembly	ABS + stainless steel screw
27	1	1, 6	Circlip	Spring steel
28	1	7	Drive insert	Aluminum
29	1	1	Backup ring	POM
30	2		Limit stop screw	Stainless steel

Notes:
1. Included in service kit.
2. Chromated and polyurethane powder coated.
3. Chromated.
4. Hard anodized.
5. Electrophoretic coated.
6. Deltatone® coated.
7. Anodized.
8. 8x for size 0950

AD & AS SERIES

PARTS LIST - SIZE 4000

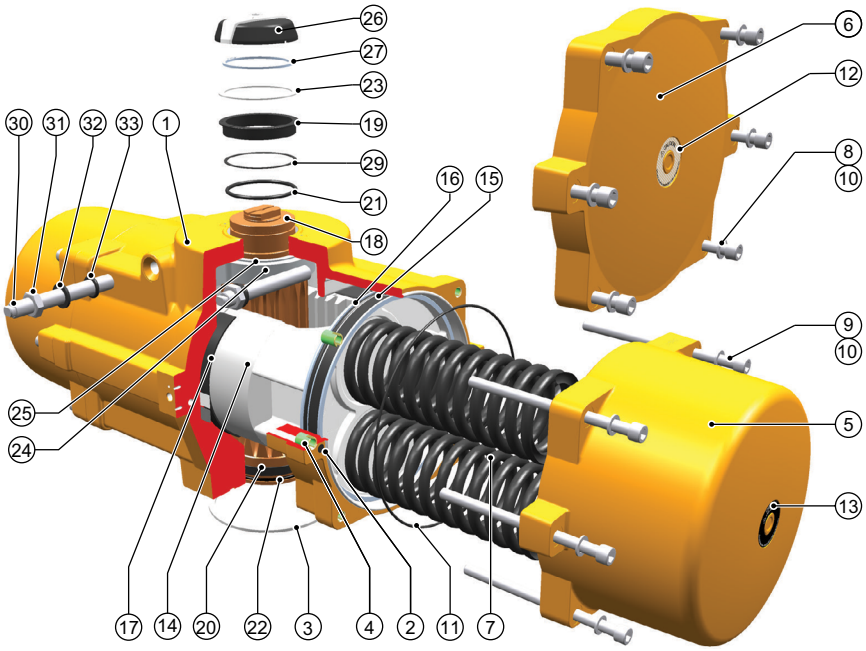

PART	QTY	NOTES	DESCRIPTION	MATERIAL
1	1	2	House	Cast Aluminum alloy
2	2	1	B-port seal	Nitrile rubber
3	1		Center ring	Stainless Steel AISI 304
4	12		Thread insert	Steel
5	2	2	End cap SR	Cast Aluminum alloy
6	2	2	End cap DA	Cast Aluminum alloy
7	Max. 6	5	Springs	Spring steel
8	12		End cap screw DA	Stainless steel
9	12		End cap screw SR	Stainless steel
10	12		End cap screw washer	Stainless steel
11	2	1	O-ring end cap	Nitrile rubber
12	2		Warning sticker DA	Polyester
13	2		Warning sticker SR	Polyester
14	2	3	Piston assembly	Cast Aluminum alloy
15	2	1	Bearing piston	PTFE 25% carbon-filled
16	2	1	O-ring piston	Nitrile rubber
17	2	1	Bearing strip piston rack	POM
18	1	4	Pinion	High grade aluminum
19	1	1	Bearing pinion top	POM
20	1	1	Bearing pinion bottom	POM
21	1	1	O-ring pinion top	Nitrile rubber
22	1	1	O-ring pinion bottom	Nitrile rubber
23	1	1	Thrust washer pinion	POM, black UV stabilized
24	1		Cam stroke adjustment	Steel
25	1	1	Cam thrust washer	POM, black UV stabilized
26	1		Indicator assembly	ABS + stainless steel screw
27	1	1, 6	Circlip	Spring steel
29	1	1	Backup ring	POM
30	2		Limit stop screw	Stainless steel
31	2		Limit stop nut	Stainless steel
32	2	1	Limit stop washer	PA66
33	2	1	O-ring limit stop	Nitrile rubber

Notes:
1. Included in service kit.
2. Chromated and polyurethane powder coated.
3. Chromated.
4. Hard anodized.
5. Electrophoretic coated.
6. Deltatone® coated.
7. Anodized.
8. 8x for size 0950

Customer Service (704) 841-6000 www.apollovalves.com
WE RESERVE THE RIGHT TO CHANGE BOX QUANTITIES
aalberts integrated piping systems

CORROSION PROTECTION SYSTEM

The corrosion protection system of a standard Apollo pneumatic actuator consists of the following treatments or materials:

ELECTROPHORETIC FINISH ON SPRINGS

- Springs are protected from corrosion using an electrophoretic finish.

CHROMATE PRE-TREATMENT

- The housing and end caps get a chromate pre-treatment prior to coating. The pre-treatment takes care of a perfect bonding of the coating layer to the aluminum housing and gives additional corrosion protection to the bore of the housing.

POWDER COAT

- Polyurethane powder coating for exterior use.
- The powder coating is applied cold using automatic electrostatic spray equipment and is cured for about 10 minutes at a minimum of 200°C (392°F) offering excellent light and weather resistance.
- The powder coating thickness is between 80 and 160 microns (3.15 and 6.3 mils).
- Good chemical resistance against most bases, acids, solvents, alkalis, and oils at normal temperatures.
- Excellent exterior mechanical durability.
- The coating has passed a salt spray test according to ASTM B117 for 1,000 hours.
- The powder coating is virtually solvent free, and therefore environmentally friendly.

HIGH GRADE & HARD ANODIZED ALUMINUM PINION

- Actuators with high grade & hard anodized aluminum pinions have passed a 1,000 hours salt spray test.

STAINLESS STEEL OR DELTATONE® TREATED EXTERNAL STEEL PARTS

- External parts are stainless steel or steel alloy with a Deltatone® treatment for optimum protection and durability.

THE CHEMICAL AND DURABILITY ASSESSMENT

- All these components, treatments and finishes, including the durable pinion design, anodized surface finish, standard powder coat paint and stainless steel treated external fasteners shows no decline of actuator functions after 1,000 hours salt spray test.

TECHNICAL DATA

- Coating: Polyurethane powder coating for exterior use.
- Salt spray test: ASTM B117: 1,000 hours
- Color: Yellow
- Materials:
  Housing: Chromated aluminum alloy
  Endcaps: Chromated aluminum alloy
  Pistons: Chromated aluminum alloy
  Pinion: High grade aluminum alloy, hard anodized
- Springs: Electrophoretic finish
- Fasteners: Stainless steel or alloy steel with Deltatone® treatment
- Type Sticker: Nylon

POLYURETHANE POWDER COATING - TEST RESULTS

NO.	ITEM	STANDARD	SPECIFICATION
1	Hardness	ASTM D3363 Pencil (Mitsubishi Uni)	H
2	Adhesion	ISO 2409, ASTM D3359 Cross hatch test (2 mm)	Gt (0) 100% Adhesion
3	Impact test	ASTM D2794 5/8" Ball (direct)	Min. 60 lb.in. without detachment
4	Bend test	DIN 53152, ISO1519, ASTM D522	Min. 3.2 mm without cracking
5	Resistance to humidity	ASTM D543 3% H2S04, 4 hours	No Blistering
6	Alkali resistance	ASTM D543 10% NaOH, 4 hours	No Blistering
7	Water resistance	DIN 50017, min.	No Blistering
8	UV resistance	ASTM G 154 (UVB-313)	Excellent color and gloss retentionion

Note: Contains general information as supplied by the paint supplier and describes typical properties of the coating.

ASSEMBLY CODES

SPRING RETURN (AS) ACTUATORS

ASSEMBLY CODE: -ACA

- Standard orientation, clockwise-to-close, fail-close

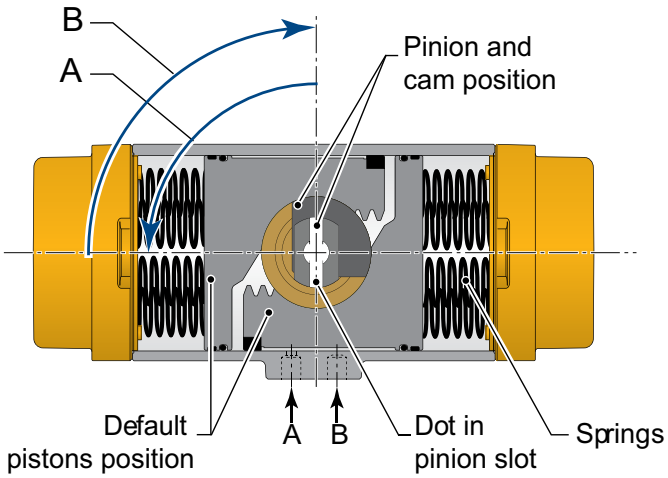

ASSEMBLY CODE: -AFA

- Reverse, Counterclockwise-to-close, fail-open

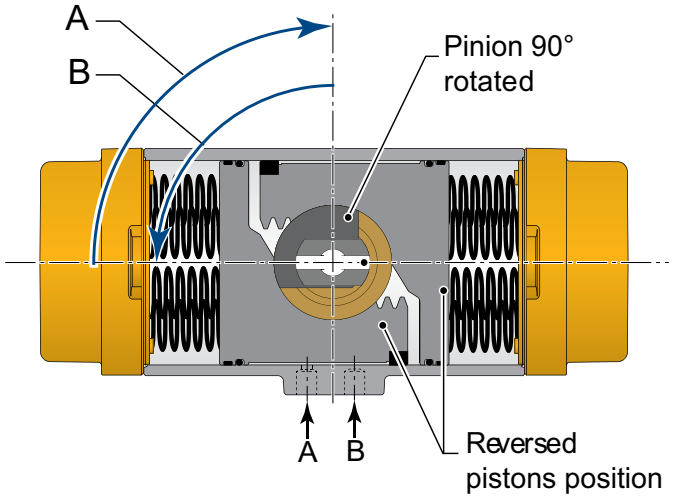

All views are from above. Pistons are shown in inward positions.
A = Central air chamber pressurized
B = Spring Stroke

ASSEMBLY CODES

DOUBLE-ACTING (AD) ACTUATORS

ASSEMBLY CODE: -ACA

- Standard orientation, clockwise-to-close

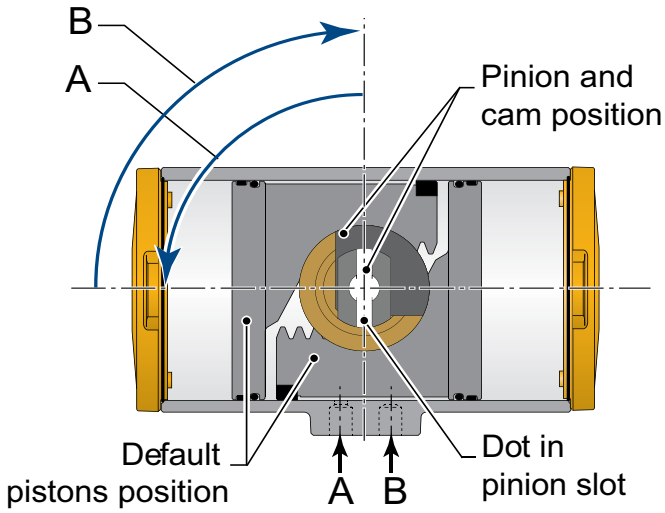

ASSEMBLY CODE: -AFA

- Reverse, counterclockwise-to-open

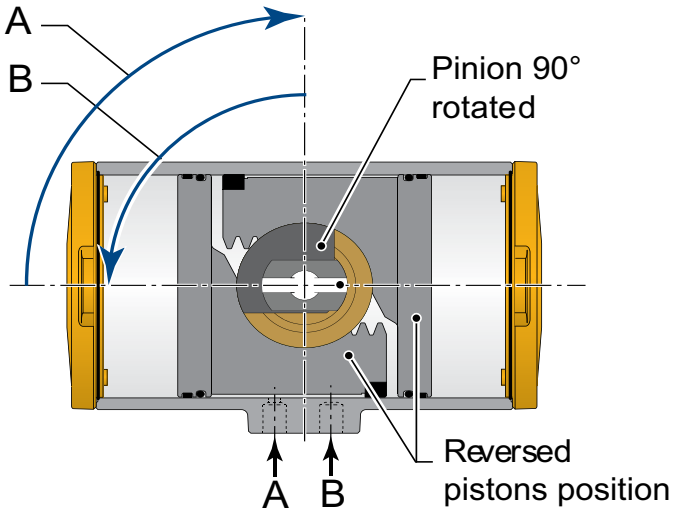

All views are from above. Pistons are shown in inward positions.
A = Central air chamber pressurized
B = Spring Stroke

ACTUATOR TORQUE

SPRING RETURN (LBF.IN.)

ACTUATOR SIZE	SPRING SET #	SPRING STROKE TORQUE (LBF.IN.)		AIR STROKE TORQUE SUPPLY PRESSURE (LBF.IN.)															
				40 PSIG		50 PSIG		60 PSIG		70 PSIG		80 PSIG		90 PSIG		100 PSIG		120 PSIG	
		START	END	START	END	START	END	START	END	START	END	START	END	START	END	START	END	START	END
AS0012	2	64	41	-	-	31	5	47	21	63	37	79	53	95	69	111	84	142	116
AS0025	1	31	20	93	80	123	109	152	139	181	168	211	198	240	227	270	257	329	316
	2	63	39	70	44	100	73	129	103	159	132	188	162	218	191	247	221	306	280
	3	94	59	48	8	77	37	107	67	136	96	166	126	195	155	225	185	283	244
	4	125	79	-	-	-	-	84	31	113	60	143	90	172	119	202	149	261	208
	5	156	99	-	-	-	-	-	-	91	24	120	54	150	83	179	113	238	172
	6	188	118	-	-	-	-	-	-	-	-	98	18	127	47	157	77	216	136
AS0040	1	58	37	175	150	230	206	285	261	341	316	396	371	451	427	506	482	617	592
	2	116	73	133	84	188	139	243	195	299	250	354	305	409	360	464	415	575	526
	3	174	110	91	18	146	73	201	128	257	183	312	239	367	294	422	349	533	459
	4	231	146	-	-	-	-	159	62	214	117	270	172	325	227	380	283	491	393
	5	289	183	-	-	-	-	-	-	172	50	228	106	283	161	338	216	449	327
	6	347	220	-	-	-	-	-	-	-	-	186	39	241	94	296	150	407	260
AS0065	1	90	57	265	227	349	311	434	395	518	479	602	564	686	648	770	732	939	900
	2	181	114	200	123	284	207	368	291	452	376	537	460	621	544	705	628	873	796
	3	271	171	134	19	219	103	303	188	387	272	471	356	555	440	639	524	808	693
	4	361	228	-	-	-	-	237	84	322	168	406	252	490	336	574	420	742	589
	5	452	285	-	-	-	-	-	-	256	64	340	148	424	232	509	317	677	485
	6	542	341	-	-	-	-	-	-	-	-	275	44	359	129	443	213	612	381
AS0100	1	131	83	394	339	518	463	643	588	767	712	892	836	1016	961	1141	1085	1390	1334
	2	262	166	299	188	423	313	548	437	672	562	797	686	921	811	1046	935	1295	1184
	3	392	248	203	38	328	162	452	287	577	411	701	536	826	660	950	785	1199	1034
	4	523	331	-	-	-	-	357	136	482	261	606	385	731	510	855	634	1104	883
	5	654	414	-	-	-	-	-	-	387	110	511	235	636	359	760	484	1009	733
	6	785	497	-	-	-	-	-	-	-	-	416	85	540	209	665	334	914	583
AS0150	1	208	131	633	544	832	743	1031	942	1231	1142	1430	1341	1629	1540	1829	1740	2227	2138
	2	416	262	482	304	681	504	881	703	1080	902	1279	1102	1479	1301	1678	1500	2077	1899
	3	625	393	332	65	531	264	730	464	930	663	1129	862	1328	1062	1528	1261	1926	1660
	4	833	524	-	-	-	-	580	224	779	424	979	623	1178	823	1377	1022	1776	1421
	5	1041	654	-	-	-	-	-	-	629	185	828	384	1027	583	1227	783	1626	1181
	6	1249	785	-	-	-	-	-	-	-	-	678	145	877	344	1076	543	1475	942
AS0200	1	289	182	862	739	1135	1012	1408	1285	1681	1558	1954	1831	2226	2104	2499	2376	3045	2922
	2	578	364	653	407	926	680	1198	953	1471	1226	1744	1499	2017	1774	2290	2044	2836	2590
	3	867	547	443	75	716	348	989	621	1262	894	1535	1166	1808	1439	2080	1712	2626	2258
	4	1156	729	-	-	-	-	780	289	1052	561	1325	834	1598	1107	1871	1380	2417	1926
	5	1445	911	-	-	-	-	-	-	843	229	1116	502	1389	775	1662	1048	2207	1593
	6	1734	1093	-	-	-	-	-	-	-	-	906	170	1179	443	1452	716	1998	1261

= Standard Spring Set

SPRING RETURN TORQUE DIAGRAM

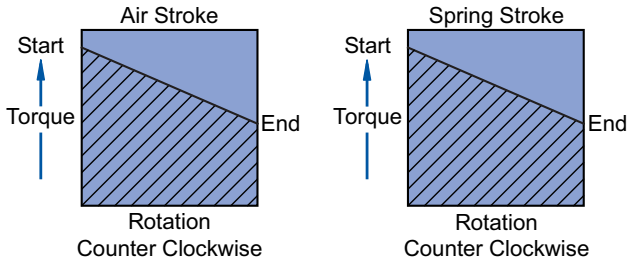

Customer Service (704) 841-6000
www.apollovalves.com
WE RESERVE THE RIGHT TO CHANGE BOX QUANTITIES
aalberts integrated piping systems

ACTUATOR TORQUE

SPRING RETURN (LBF.IN.)

ACTUATOR SIZE	SPRING SET #	SPRING STROKE TORQUE (LBF.IN.)		AIR STROKE TORQUE SUPPLY PRESSURE (LBF.IN.)															
				40 PSIG		50 PSIG		60 PSIG		70 PSIG		80 PSIG		90 PSIG		100 PSIG		120 PSIG	
		START	END	START	END	START	END	START	END	START	END	START	END	START	END	START	END	START	END
AS0350	1	495	312	1503	1293	1978	1767	2452	2241	2926	2716	3400	3190	3874	3664	4348	4138	5296	5086
	2	990	624	1145	724	1619	1199	2093	1673	2567	2147	3041	2621	3515	3095	3990	3569	4938	4517
	3	1485	936	786	156	1261	630	1735	1104	2209	1578	2683	2052	3157	2526	3631	3000	4579	3948
	4	1979	1248	-	-	-	-	1376	535	1850	1009	2324	1483	2798	1957	3272	2431	4221	3380
	5	2474	1560	-	-	-	-	-	-	1492	440	1966	914	2440	1388	2914	1863	3862	2811
	6	2969	1872	-	-	-	-	-	-	-	-	1607	346	2081	820	2555	1294	3504	2242
AS0600	1	848	534	2551	2190	3356	2996	4162	3801	4968	4607	5773	5413	6579	6218	7385	7024	8996	8635
	2	1695	1068	1937	1216	2743	2021	3548	2827	4354	3633	5160	4438	5965	5244	6771	6050	8382	7661
	3	2543	1601	1324	241	2129	1047	2935	1853	3741	2658	4546	3464	5352	4270	6158	5075	7769	6687
	4	3391	2135	-	-	-	-	2321	878	3127	1684	3933	2490	4738	3295	5544	4101	7155	5712
	5	4238	2669	-	-	-	-	-	-	2513	710	3319	1515	4125	2321	4930	3127	6542	4738
	6	5086	3203	-	-	-	-	-	-	-	-	2706	541	3511	1346	4317	2152	5928	3763
AS0950	1	1070	685	3842	3360	5038	4556	6234	5752	7430	6948	8627	8144	9823	9340	11019	10536	13411	12929
	2	2141	1369	2986	2022	4182	3218	5379	4414	6575	5610	7771	6806	8967	8002	10163	9198	12555	11591
	3	3211	2054	2130	683	3327	1880	4523	3076	5719	4272	6915	5468	8111	6664	9307	7860	11699	10252
	4	4282	2738	-	-	2471	541	3667	1738	4863	2934	6059	4130	7255	5326	8451	6522	10844	8914
	5	5352	3423	-	-	-	-	2811	399	4007	1596	5203	2792	6400	3988	7696	5184	9988	7576
	6	6423	4108	-	-	-	-	-	-	3152	257	4318	1454	5544	2650	6740	3846	9132	6238
AS1600	1	1835	1141	6447	5579	8452	7583	10456	9588	12461	11592	14466	13597	16470	15602	18475	17606	22484	21615
	2	3671	2281	5022	3284	7026	5289	9031	7294	11035	9298	13040	11303	15044	13307	17049	15312	21058	19321
	3	5506	3422	3596	990	5600	2995	7605	4999	9610	7004	11614	9008	13619	11013	15623	13018	19632	17027
	4	7342	4562	-	-	4175	700	6179	2705	8184	4709	10188	6714	12193	8719	14198	10723	18207	14732
	5	9177	5703	-	-	-	-	4753	411	6758	2415	8763	4420	10767	6424	12772	8429	16781	12438
	6	11013	6844	-	-	-	-	-	-	-	-	7337	2125	9342	4130	11346	6135	15355	10144
AS2500	1	2607	1597	10204	8941	13310	12047	16416	15153	19523	18259	22629	21366	25735	24472	28841	27578	35054	33791
	2	5215	3194	8208	5681	11314	8788	14420	11894	17526	15000	20633	18106	23739	21213	26845	24319	33058	30532
	3	7822	4791	6211	2422	9318	5528	12424	8635	15530	11741	18636	14847	21743	17953	24849	21060	31062	27272
	4	10430	6388	-	-	7321	2269	10428	5375	13534	8482	16640	11588	19747	14694	22853	17800	29065	24013
	5	13037	7985	-	-	-	-	8432	2116	11538	5222	14644	8329	17750	11435	20857	14541	27069	20754
	6	15645	9582	-	-	-	-	-	-	9542	1963	12648	5069	15754	8176	18860	11282	25073	17494
AS4000	1	4183	2645	16495	14572	21537	19613	26578	24655	31620	29696	36661	34738	41703	39780	46744	44821	56828	54904
	2	8366	5289	13189	9343	18231	14384	23273	19426	28314	24467	33356	29509	38397	34550	43439	39592	53522	49675
	3	12550	7934	9884	4114	14925	9155	19967	14197	25008	19238	30050	24280	35092	29321	40133	34363	50216	44446
	4	16733	10578	-	-	11620	3926	16661	8968	21703	14009	26744	19051	31786	24092	36827	29134	46911	39217
	5	20916	13223	-	-	-	-	13355	3739	18397	8780	23439	13822	28480	18863	33522	23905	43605	33988
	6	25099	15867	-	-	-	-	-	-	15091	3551	20133	8593	25174	13634	30216	18676	40299	28759

= Standard Spring Set

SPRING RETURN TORQUE DIAGRAM

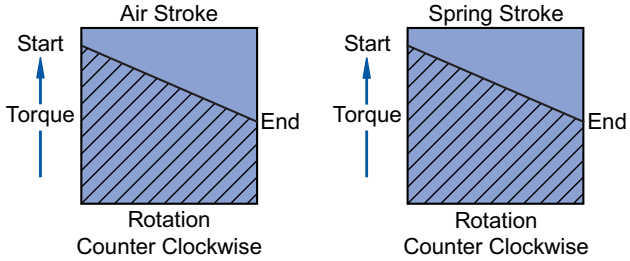

ACTUATOR TORQUE

DOUBLE ACTING (LBF.IN.)

ACTUATOR SIZE	TORQUE (LBF.IN.) @ SUPPLY PRESSURE (PSIG)												
	30	35	40	45	50	55	60	70	75	80	90	100	120
AD0012	44	51	59	66	74	81	89	104	112	119	134	149	179
AD0025	81	95	109	123	137	151	165	193	207	220	248	276	332
AD0040	153	179	205	231	257	283	309	361	387	413	466	518	622
AD0065	233	272	312	352	392	431	471	550	590	630	709	789	948
AD0100	344	403	461	520	579	638	696	814	873	931	1049	1166	1401
AD0150	551	645	739	833	927	1021	1115	1304	1398	1492	1680	1868	2244
AD0200	754	883	1011	1140	1269	1398	1527	1784	1913	2042	2299	2557	3072
AD0350	1310	1534	1758	1981	2205	2429	2653	3100	3324	3547	3995	4442	5337
AD0600	2226	2606	2987	3367	3747	4127	4508	5268	5648	6028	6789	7549	9070
AD0950	3374	3950	4527	5103	5679	6255	6832	7984	8560	9137	10289	11442	13747
AD1600	5654	6620	7586	8552	9517	10483	11449	13380	14346	15312	17243	19175	23038
AD2500	8762	10259	11755	13252	14748	16245	17741	20734	22231	23727	26720	29713	35699
AD4000	14221	16650	19079	21508	23937	26365	28794	33652	36081	38510	43368	48225	57941

= Standard Spring Set

DOUBLE ACTING TORQUE DIAGRAM

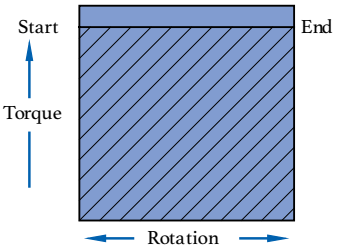

Customer Service (704) 841-6000
www.apollovalves.com
WE RESERVE THE RIGHT TO CHANGE BOX QUANTITIES
aalberts integrated piping systems

PART NUMBER MATRIX

PART NUMBER MATRIX

A	S	0100	N	04	A	C	A
PREFIX	ACTION	SIZE	SEAL OPTION	SPRING SET	INSERTS	FAIL POSITION	REVISION
A	D - DOUBLE ACTING	0012	N - NITRILE NORMAL TEMP RANGE: -4°F - 175°F	00 (DA)	A - STANDARD SQUARE	C - FAIL CLOSED (FC)	A
	S - SPRING RETURN	0025		02	B - WITHOUT INSERT	F - FAIL OPEN (FO)	
	K - KIT	0040		03		D - NO SPRING (DOUBLE ACTING FAIL LAST POSITION)	
		0065	H - FLUOROCARBON HIGH TEMP RANGE: -4°F - 250°F	04			
		0100		05			
		0150		06			
		0200	L - SILICONE LOW TEMP RANGE: -40°F - 175°F				
		0350					
		0600					
		0950					
		1600					
		2500					
		4000					

EXAMPLE: AS0100N04ACA = Spring Return, 0100 Size, Nitrile Seals, 04 Spring Set, Standard Square Drive, Fail Closed

SIZING OF RACK & PINION ACTUATOR

Sizing is the selection procedure to select the right size of actuator on a valve with a given torque characteristic. The following information gives brief examples on how to size actuators and which data is needed.

TORQUE CHARACTERISTICS OF VALVES

Apollo actuators are commonly used to operate butterfly, ball, and plug valves. The instructions below are intended for these types of valve applications, but can also be used for other quarter-turn applications.

GENERIC

TORQUE CHARACTERISTICS

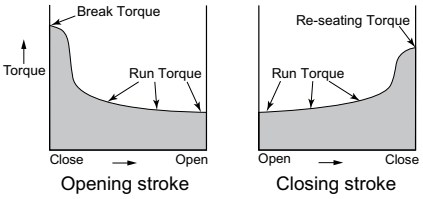

VALVE TORQUE VALUES AND SAFETY FACTORS

Establish the valve operating torque beginning with the torque constants for the appropriate pressure and valve. Use the torque adjustment factors to arrive at an in-service torque. Multiple adjustment factors may be required. Do not forget to include adjustments for graphite stem packing.

DOUBLE ACTING

TORQUE CHARACTERISTICS

Based on the available air supply, select an actuator with torque outputs that exceed the in-service torque by at least 10%.

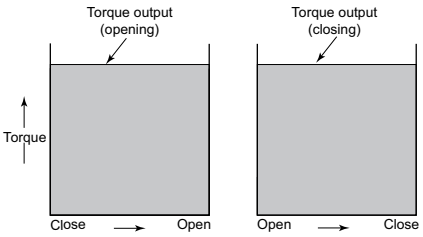

SPRING RETURN

TORQUE CHARACTERISTICS

Based on the available air supply, select an actuator where both the spring-ending torque and air-ending torque amount exceeds the in-service torque by at least 10%.

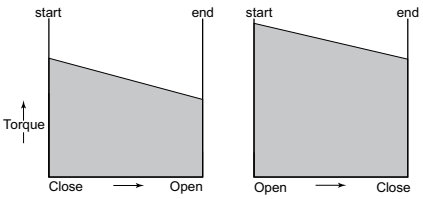

Customer Service (704) 841-6000
www.apollovalves.com
WE RESERVE THE RIGHT TO CHANGE BOX QUANTITIES
aalberts integrated piping systems

SPRING (CARTRIDGE) PLACEMENT

SIZES 0025 THRU 0600

Apollo spring return actuators are supplied with springs on each end of the actuator. Throughout the size range, there are different spring designs:

- Size 0012 has only 1 spring per side
- Sizes 0025 thru 0600 have a maximum of 6 springs per side
- Sizes 0950 thru 4000 have a maximum of 3 springs per side

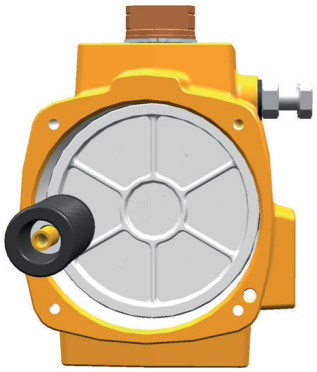

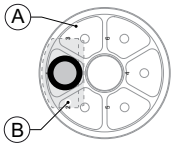

N = 10

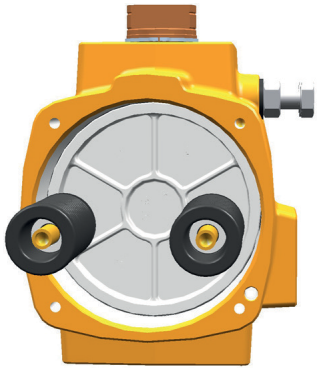

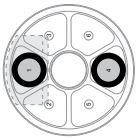

N = 20

N = 30

N = 40

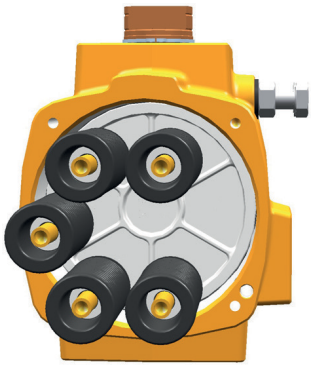

N = 50

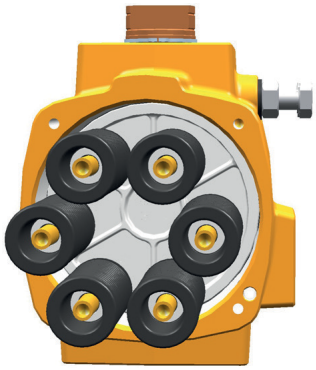

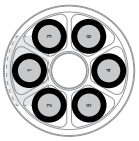

N = 60

A = Piston Top View
B = Position of Piston Gear Rack

SPRING (CARTRIDGE) PLACEMENT

SIZES 0950 THRU 4000

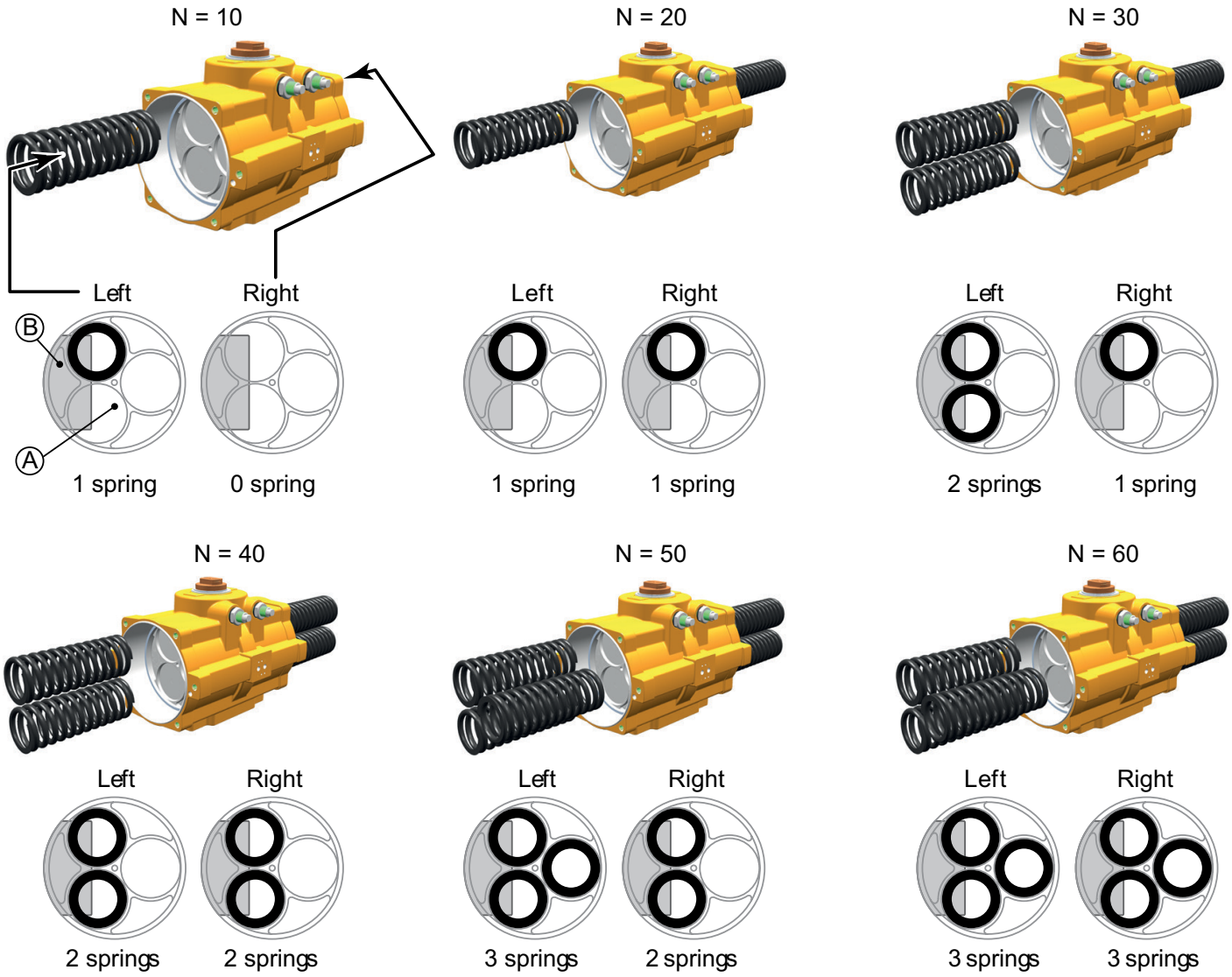

A = Piston Top View
B = Position of Piston Gear Rack

Customer Service (704) 841-6000
www.apollovalves.com
WE RESERVE THE RIGHT TO CHANGE BOX QUANTITIES
aalberts integrated piping systems

DATA SHEET

0012 (ISO 5211)

DIMENSIONS

SOLENOID, TOP MOUNTING INTERFACES, VALVE INTERFACE, AND DRIVE DETAILS

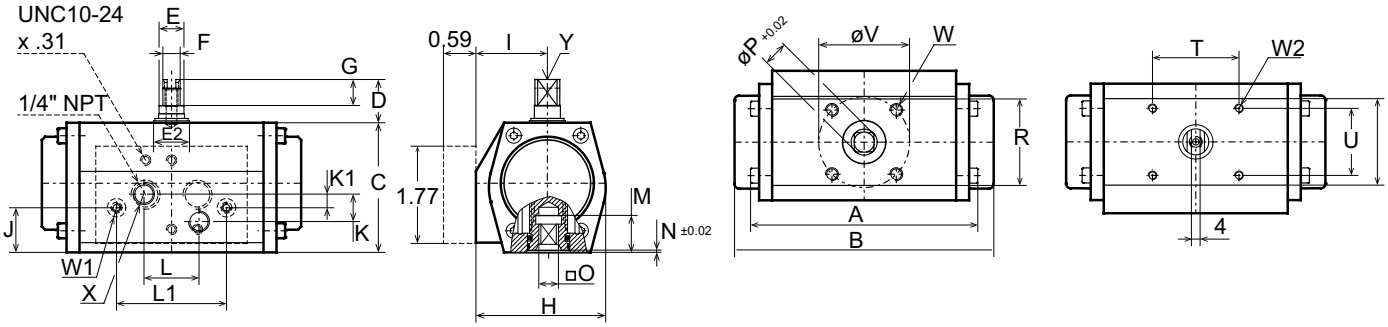

DIMENSIONS

DIMENSIONS (IN.)									
A (AD)	**A (AS)**	**C**	**D**	**E**	**E2**	**F**	**G**	**H**	**I**
4.06	4.65	2.36	0.79	0.63	0.91	0.39	0.47	2.36	1.3
J	**K**	**K1**	**L**	**L1**	**M**	**N**	**O MAX.**	**O MIN.**	**P**
0.83	0.5	0.25	1	2	0.65	0.039	0.36	0.356	0.476
R	**R1**	**T**	**U**	**V**	**W**	**W1**	**W2**	**X**	**Y**
1.57	1.57	1.57	1.22	1.654	10-24 x 0.24"	10-24 x 0.20"	10-24 x 0.20"	1/8"	M6 x 0.047"

GENERAL DATA

0012

BORE		1.811	inch
STROKE		0.496	inch
WEIGHT	Spring return	1.3	lb.
	Double-acting	1.5	lb.
VOLUME	Port A	3.1	cu.in.
	Port B	3.7	cu.in.
AIR CONNECTION		2 x ¼"	NPT
PRESSURE RANGE	Max. Operating	120	psig
	Spring return	43-120	psig
	Double-acting	3-120	psig
PRESSURE MEDIA	Clean, dry, or lubricated air or inert gas		
CYCLE SPEED SPRING RETURN	Open	0.4	sec.
	Close	0.4	sec.
CYCLE SPEED DOUBLE-ACTING	Open	0.4	sec.
	Close	0.4	sec.
STANDARD TEMPERATURE RANGE		-4 to 176	°F
LUBRICATION	Lubricated for life[1]		
STROKE	90°		
FINISH	Polyurethane powder coat		

[1] According to EN 15714-3.

Test Conditions:

1. Solenoid with flow capacity of 0.6 m³/hr.
2. Pipe diameter: 6 mm
3. Medium: clean air
4. Supply pressure: 5.5 barg (80 psig)
5. Temperature: Room temperature

Notes:

- Volume is the actuator free air volume at 1 atm
- Flange and square drive to ISO 5211

European Directives:

- PED: Suitable for use with group 2 gases according to Pressure Equipment Directive (PED) 2014/68/EU
- ATEX: Suitable for use in hazardous areas classified II 2 GD, zones 1 or 2 (gases) and 21 and 22 (dust) according to ATEX Directive 2014/34/EU

ENVELOPE DIMENSIONS

SOLENOID AND TOP MOUNTING INTERFACE, SIZES 0025 – 0350

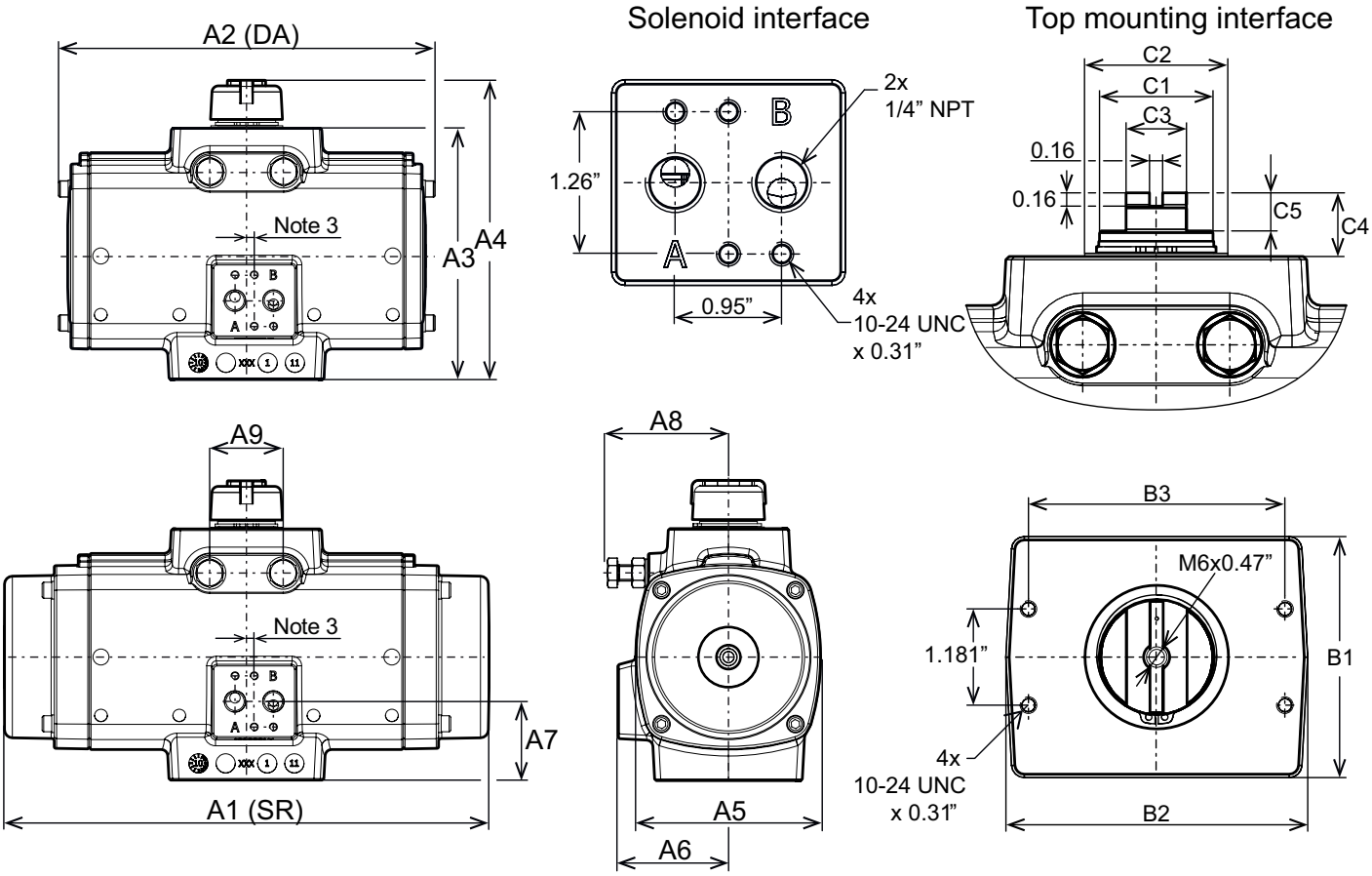

DIMENSIONS

DIMENSIONS (IN.)	ACTUATOR SIZE						
	25	40	65	100	150	200	350
A1	6.54	7.55	8.53	9.72	11.97	14.23	15.15
A2	6.54	7.55	8.53	9.72	9.25	10.43	11.18
A3	3.59	4.39	4.86	5.14	6.19	6.42	7.92
A4	4.69	5.47	5.94	6.22	7.28	7.52	9.06
A5	2.68	3.23	3.62	4.06	4.57	4.88	6.34
A6	1.91	2.15	2.28	2.5	2.72	2.83	3.35
A7	1.16	1.34	1.48	1.5	1.93	1.92	1.65
A8	1.89	2.28	2.72	2.72	2.95	3.43	4.29
A9	0.71	0.98	1.06	1.1	1.81	1.81	1.81
B1	1.69	1.77	1.97	2.36	2.95	2.95	3.35
B2	3.7	3.7	3.7	3.82	3.7	3.7	3.94
B3	3.15	3.15	3.15	3.15	3.15	3.15	3.15
C1	0.63	0.87	0.87	0.87	1.34	1.42	1.42
C2	0.91	1.18	1.18	1.38	1.77	1.77	1.77
C3	0.55	0.55	0.55	0.55	0.75	0.75	0.75
C4	0.79	0.79	0.79	0.79	0.79	0.79	0.79
C5	0.47	0.47	0.47	0.47	0.47	0.47	0.47

Notes:
1. DA= Double acting, SR= Spring return
2. Solenoid interface and top mounting interface according to VDI/VDE 3845 (NAMUR).
3. The solenoid drilling pattern is shifted 0.16" for sizes 0025 and 0.08" for the size 0040 vs. the centerline of the actuator.
4. Imperial threads are UNC for fastener thread holes and NPT for air connection ports.

ENVELOPE DIMENSIONS

ENVELOPE DIMENSIONS: SOLENOID AND TOP MOUNTING INTERFACE, SIZES 0600 – 4000

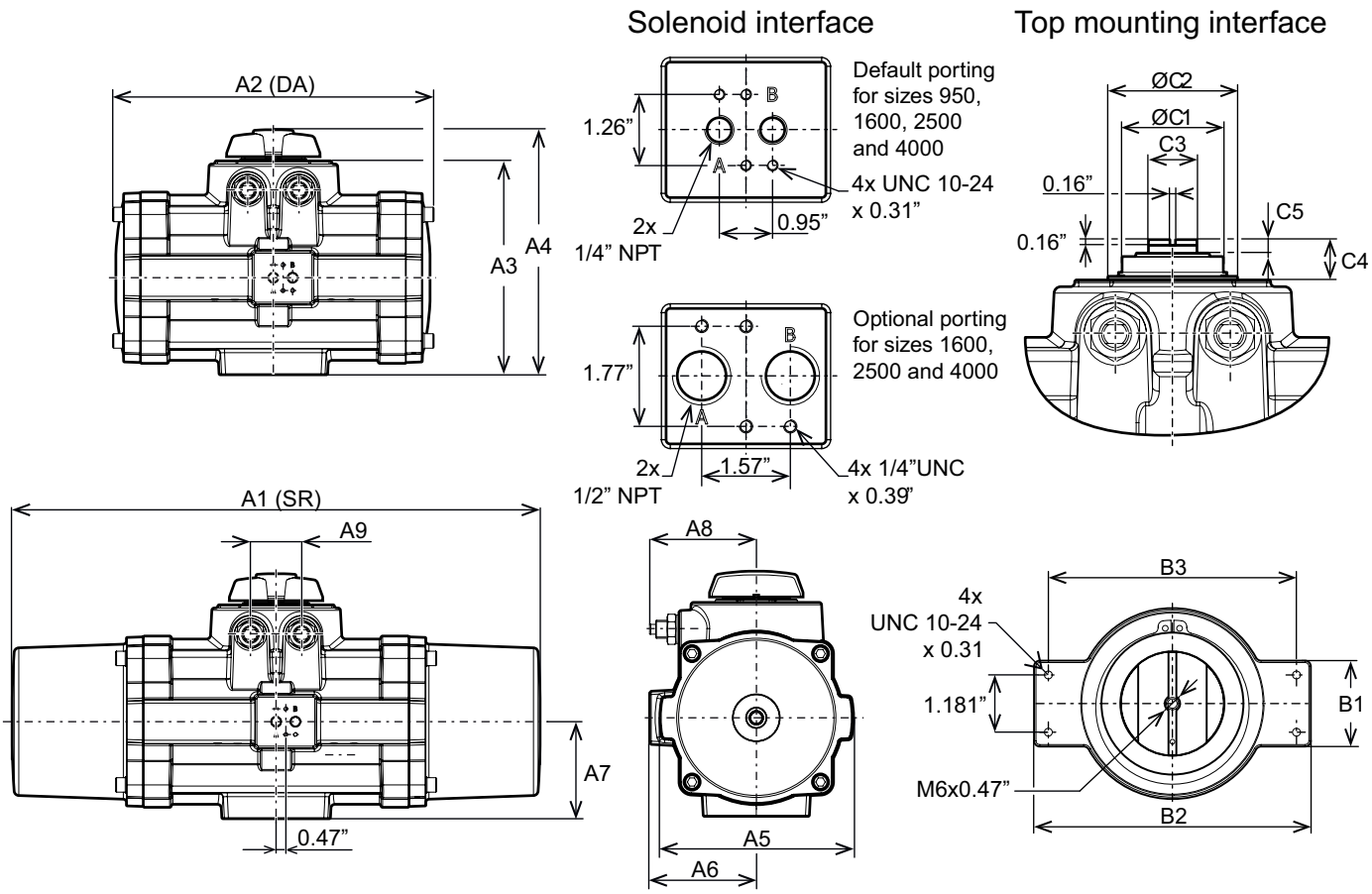

DIMENSIONS

DIMENSIONS (IN.)	ACTUATOR SIZE				
	600	950	1600	2500	4000
A1	18.73	25.91	28.82	34.53	37.76
A2	14.02	15.75	18.19	21.65	25.55
A3	9.77	10.55	11.89	13.94	15.31
A4	11.5	12.01	13.35	15.43	16.81
A5	7.68	9.41	12.05	13.78	15.75
A6	4.02	5.16	5.87	6.69	7.72
A7	2.64	4.76	5.39	6.18	7.24
A8	5.2	5.16	6.14	7.13	6.89
A9	2.36	2.52	3.35	4.02	7.24
B1	3.86	1.77	1.77	1.77	1.77
B2	5.83	5.71	5.71	5.71	5.71
B3	5.12	5.12	5.12	5.12	5.12
C1	2.17	2.56	2.95	3.74	3.78
C2	2.56	3.27	3.78	4.65	4.53
C3	1.42	1.42	1.42	1.42	1.42
C4	1.18	1.18	1.18	1.18	1.18
C5	0.39	0.39	0.39	0.39	0.39

Notes:
1. DA=Double-Acting, SR=Spring return
2. Solenoid interface and top mounting interface according to VDI/VDE 3845 (NAMUR).
3. The solenoid drilling pattern is shifted 0.95" for sizes 0950 4000 versus the centerline of the actuator.
4. Imperial threads are UNC for fastener thread holes and NPT for air connection ports.

VALVE FLANGE AND DRIVE DETAILS

DIMENSIONS: SIZES 0025 – 4000

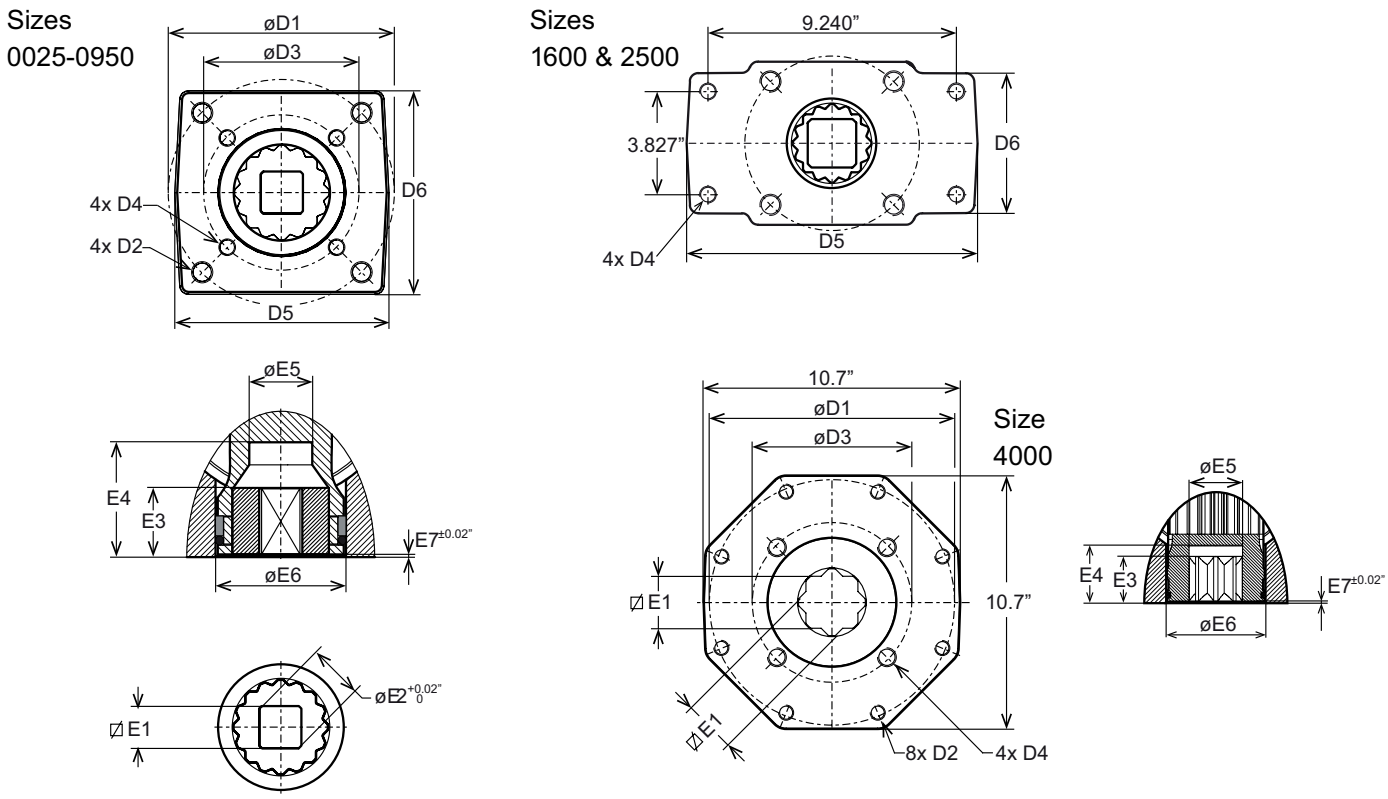

DIMENSIONS

DIMENSIONS (IN.)	ACTUATOR SIZE											
	0025	0040	0065	0100	0150	0200	0350	0600	0950	1600	2500	4000
ISO 1	F05	F07	F07	F7	F10	F10	F10	F12	F14	F16	F16	F25
D1	1.969	2.756	2.756	2.756	4.016	4.016	4.016	4.921	5.512	6.496	6.496	10
D2	1/4"-20 x 0.35	5/16"-18 x 0.47	5/16"-18 x 0.47	5/16"-18 x 0.47	3/8"-16 x 0.59	3/8"-16 x 0.59	3/8"-16 x 0.59	1/2"-13 x 0.71	5/8"-11 x 0.94	3/4"-10 x 1.18	3/4"-10 x 1.18	5/8"-11 x 0.94
ISO 2	F03	F05	F05	F05	F07	F07	F07	F10	F10	F25*	F25*	F16
D3	1.417	1.969	1.969	1.969	2.756	2.756	2.756	4.016	4.016	--	--	6.496
D4	10-24 x 0.31	1/4"-20 x 0.35	1/4"-20 x 0.35	1/4"-20 x 0.35	5/16"-18 x 0.47	5/16"-18 x 0.47	5/16"-18 x 0.47	3/8"-16 x 0.59	3/8"-16 x 0.59	5/8"-11 x 0.94	5/8"-11 x 0.94	3/4"-1 x 1.18
D5	1.97	2.68	2.68	2.62	3.82	3.7	3.7	4.65	5.31	11.02	11.02	10.75
D6	1.89	2.56	2.56	2.48	3.62	3.54	3.7	4.45	5.12	5.2	5.2	10.59
E1 Max.	0.436	0.554	0.554	0.751	0.751	0.87	1.067	1.067	1.424	1.817	1.817	2.176
E1 Min.	0.433	0.551	0.551	0.748	0.748	0.866	1.063	1.063	1.417	1.811	1.811	2.165
E2	0.555	0.713	0.713	0.992	1.004	1.11	1.425	1.425	2.291	2.37	2.37	2.843
E3	0.591	0.591	0.591	0.709	1.083	1.083	1.083	1.083	1.909	2.343	2.343	2.421
E4	1.34	1.34	1.34	1.34	1.97	1.97	1.97	1.97	2.58	3.21	3.21	3.02
E5	0.56	0.71	0.83	0.93	1.12	1.26	1.26	1.44	1.89	2.36	2.36	2.87
E6	0.96	1.36	1.36	1.5	2.22	2.22	2.22	2.66	3.39	4.09	4.92	5.24
E7	0.02	0.04	0.04	0.04	0.05	0.05	0.05	0.05	0.04	0.04	0.04	0.04

Notes:
1. Flange and square drive according to ISO 5211.
2. F25* =F or sizes 1600 and 2500 drilling pattern 9.240" x 3.827" represent 4 holes of a F25 drilling pattern.
3. Size 4000 has 2x inner square E1 in the pinion bottom instead of inserts.
4. Imperial threads are UNC for fastener thread holes and NPT for air connection ports.

DRIVE INSERTS

KEY FEATURES

- Drive inserts allow actuators to be directly mounted to valves.
  Eliminates the need for a bracket and coupling type mounting kit.
  The use of drive inserts significantly cuts the cost of the valve/actuator assembly.
- Standard actuators are fitted with square drive inserts.
- Special inserts may have oversized/undersized squares or double-D configurations.

DESCRIPTION

- Standard actuators are fitted with square drives inserts in accordance with ISO 5211. The ISO 5211 standard covers parallel and diagonal oriented inner squares (as per the old DIN 3337 standard).
- Additionally, a wide variety of other inserts are also available. Special inserts may have oversized/undersized squares or double-D configurations.
- Drive inserts can be supplied on factory supplied actuators or as loose items and are easily replaceable.
- Material: aluminum alloy

Notes:
Actuator size 0012 does not have inserts. This square drive is machined directly in the bottom of the pinion.
Actuator size 4000 does not have inserts. This actuator size has t the pinion.

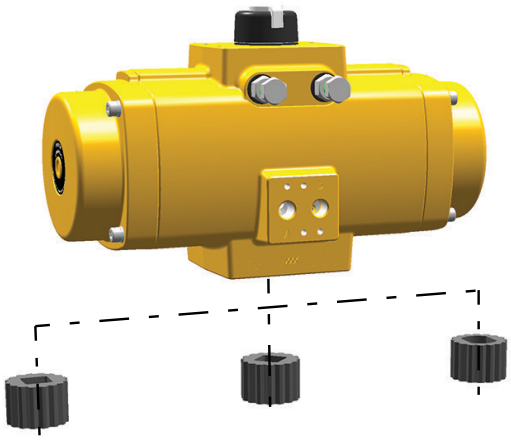

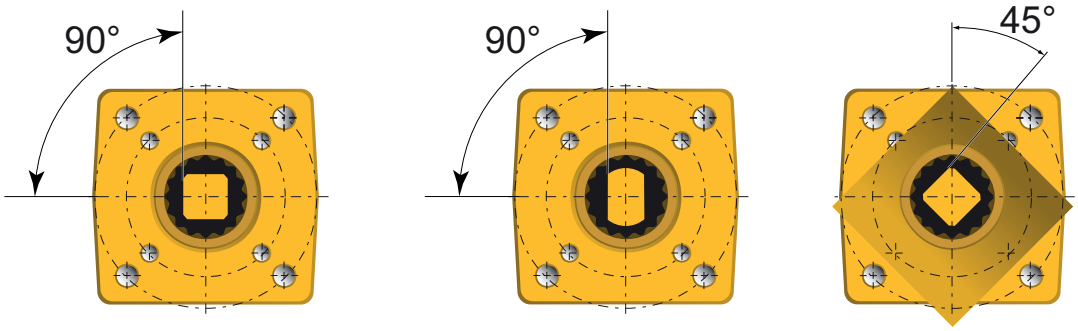

HIGH-TEMPERATURE SERVICE

DESCRIPTION

This version uses the standard aluminum actuator, but incorporates high-temperature grease, O-rings, and bearing materials; all suitable for high temperature operation up to 250°F (120°C).

SPECIFICATION

- Max. Pressure: 120 psig (8.3 barg)
- Torque Output: Standard
- Media: Air or non-corrosive gas
- Temperature: 14°F to 250°F (-10°C to 120°C)
- Finish: Polyurethane powder coating

SPARE PARTS/KITS

Dedicated high temperature spare parts kits are available for maintenance or to convert a standard actuator into a version suitable for high temperature service.

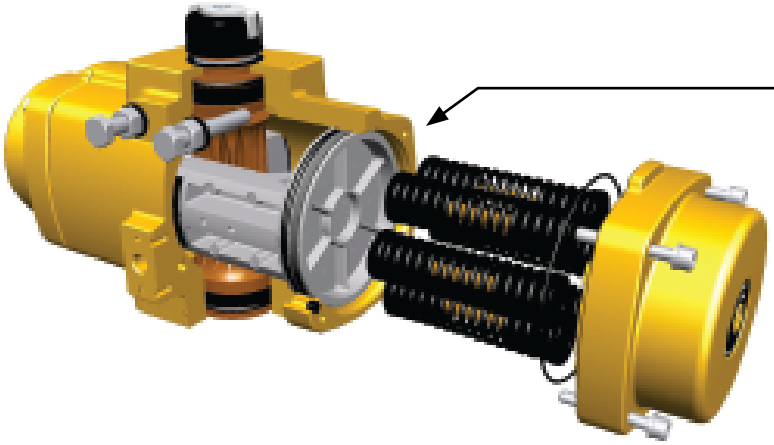

HIGH-TEMPERATURE COMPONENTS:

- Castrol High Performance Grease
- Viton (FPM) o-ring seals
- PTFE 24% carbon filled piston bearings
- Nylon 66 resin containing Aramid Fibre & PTFE for bearing strip piston rack and pinion bearings

STANDARD PARTS LIST

DESCRIPTION	MATERIAL
Housing	Cast Aluminum Alloy
End Cap	Cast Aluminum Alloy
Piston	Cast Aluminum Alloy
Pinion	High Grade Aluminum
Spring Cartridge	Spring Steel
Bearing Strip Piston Rack	Nylon-66 Resin containing Aramid Fiber & PTFE
Bearing Piston	PTFE 25% Carbon Filled
Bearing Pinion	Nylon-66 Resin containing Aramid Fiber & PTFE
Thrust Washer	POM, Black UV Stabilized
End Cap Screw	Stainless Steel
Circlip	Spring Steel
O-ring Seal Pinion	Viton FPM
O-ring Seal Piston	Viton FPM
O-ring Seal End cap	Viton FPM
O-ring Seal Limit Stop	Viton FPM
B-Port Seal	Silicon Rubber
Limit Stop Screw	Stainless Steel
Limit Stop Nut	Stainless Steel
Limit Stop Washer	PA66
Warning Sticker	Polyester
Indicator Assembly	ABS + Stainless Steel Screw
Insert Drive	Aluminum Alloy
Grease	Castrol High Temperature Grease (or Equiv.)

LOW-TEMPERATURE SERVICE

DESCRIPTION
This version uses the standard aluminum actuator, but incorporates low temperature grease and O-ring seal materials; all suitable for low temperature operation down to -40°F (-40°C).

SPECIFICATION
- Max. Pressure: 120 psig (8.3 barg)
- Torque Output: Standard
- Media: Air or non-corrosive gas
- Temperature: -40°F to 176°F (-40°C to 80°C)
- Finish: Polyurethane Powder Coating
- Cycle Life: Replace seals after 250,000 cycles

SPARE PARTS/KITS
Dedicated low temperature spare parts kits are available for maintenance or to convert a standard actuator into a version suitable for low temperature service.

Notes:
When operating actuators in sub-zero temperature (<32°F or <0°C) care should be taken to counter the effects of freezing condensate inside the actuator.

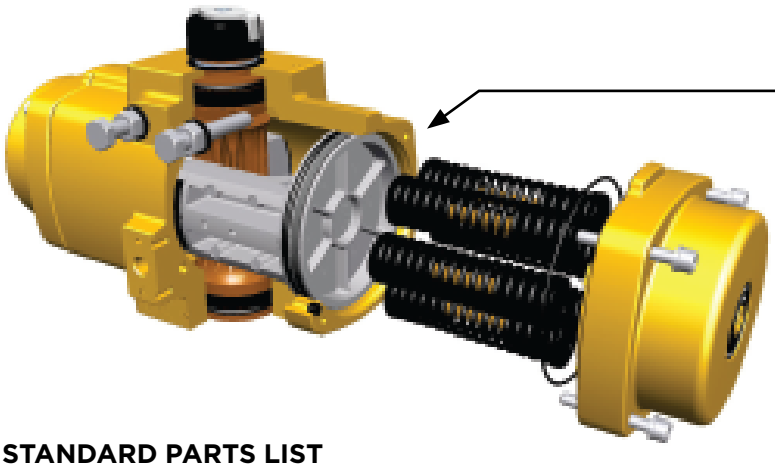

LOW-TEMPERATURE COMPONENTS:
- Castrol Tribol GR TT 1 PD grease
- Silicone (MVQ70 rubber) o-ring seals

STANDARD PARTS LIST

DESCRIPTION	MATERIAL
Housing	Cast Aluminum Alloy
End Cap	Cast Aluminum Alloy
Piston	Cast Aluminum Alloy
Pinion	High Grade Aluminum
Spring Cartridge	Spring steel
Bearing Strip Piston Rack	POM
Bearing Piston	PTFE 25% Carbon Filled
Bearing Pinion	POM
Thrust Washer	POM, Black UV Stabilized
End Cap Screw	Stainless steel
Circlip	Spring steel
O-ring Seal Pinion	Silicon MVQ70
O-ring Seal Piston	Silicon MVQ70
O-ring Seal End cap	Silicon MVQ70
O-ring Seal Limit Stop	Silicon MVQ70
B-Port Seal	Silicon Rubber
Limit Stop Screw	Stainless steel
Limit Stop Nut	Stainless steel
Limit Stop Washer	PA66
Warning Sticker	Polyester
Indicator Assembly	ABS + Stainless steel screw
Insert Drive	Aluminum Alloy
Grease	Castrol Tribol GR TT 1 PD grease (or Equiv.)

STAINLESS STEEL ACTUATORS

DESIGN & CONSTRUCTION

STAINLESS STEEL BODY
- The all SS-housing is ideal for sanitary, pulp and paper, marine and a variety of other applications where corrosion resistance is crucial.

UNIQUE DRIVE PINION
- One piece stainless steel alloy shaft, precision machined gear and teeth for precise control

BEARINGS
- Replaceable top and bottom TFE Pinion Bearings to ensure low friction, stability above 400°F, and chemical resistance

TRAVEL STOPS
- Provides +/-4° travel adjustment in outboard direction

ACCESSORY MOUNTING
- Manufactured to NAMUR to provide international standardized mounting

STAINLESS STEEL PISTONS
- Precision cast pistons are guided through full face engagement with the pinion and piston guide

NAMUR SLOTTED SHAFT
- Standard to provide a self-centering positive drive for positioners and a variety of switches

ACTUATOR MOUNTING
- Manufactured in accordance with ISO 5211.

PRE-LOADED CARTRIDGES
- Converts a standard double acting actuator to a spring return unit by simply removing the end caps and adding the spring cartridges

NAMUR SOLENOID MOUNTING
- International standard for direct mounting of solenoid valves

STAINLESS STEEL ACTUATORS

OPERATION

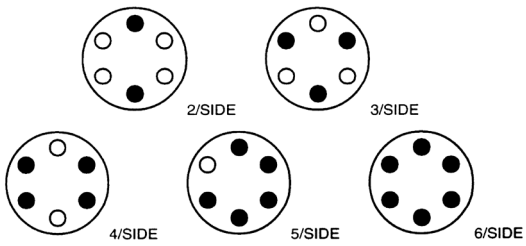

The Apollo Stainless Steel actuator is manufactured with an integral and internal air manifold. The solenoid mounting pad is manufactured to Namur dimensional standards as to allow for the direct mounting of various manufacturers' solenoid valves and other flow control devices. For applications not requiring a direct mount solenoid valve, ports are tapped to NPT standards (American National Standard taper threads).

REVERSE ROTATION

When required, a clockwise rotation of the drive pinion, by means of air to PORT A can be achieved by reversing the pistons inside the actuator body (rotate 180 degrees).

SPRING CONFIGURATION

Each Stainless Steel actuator comes with a complete spring pack (6 springs per side with nylon retainers) unless otherwise specified. When less than the full spring pack is desired for various torque outputs (see torque chart); springs can be removed from the actuator end caps. It is very important that springs be arranged in a symmetrical manner (positioned as shown) so that unwarranted side-loads do not occur between the pistons and actuator body. CAUTION: Refer to operation and maintenance instructions before disassembly and removal of springs.

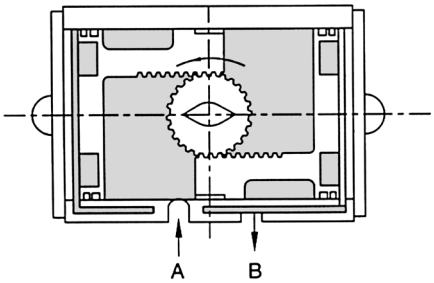

Air to PORT A: Pressure applied enters center of chamber forcing the pistons outward and rotating the drive pinion in a counter-clockwise direction and forcing exhaust air out of PORT B.

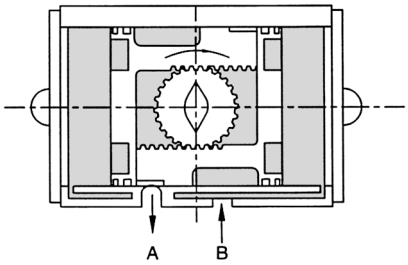

Air to PORT B: Air pressure enters the outer chambers forcing the pistons inward and rotating the drive pinion in a clockwise direction while forcing exhaust air out of PORT A.

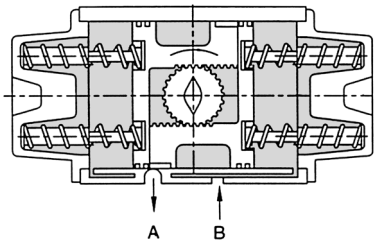

Loss of air pressure in the center chamber allows energy in the compressed springs to force the pistons inward, resulting in a clockwise rotation of the drive pinion while exhaust air leaves via PORT A.

STAINLESS STEEL ACTUATORS

FEATURES

CORROSION RESISTANCE

All metal components are cast or machined from Stainless Steel which offers excellent resistance to most corrosive chemicals as well as industrial atmospheres.

NO LUBRICATION

All actuators are factory lubricated for the optimum life of the actuator under normal conditions. Teflon® piston bearings are used because of their self-lubricating properties.

SIMPLE MAINTENANCE

Each actuator is designed for ease of maintenance. Should you wish to change a spring rating or completely rebuild a unit, total disassembly and reassembly is easily performed in just minutes with standard shop tools.

ISO/NAMUR MOUNTING

By using ISO/Namur standards, our actuators lend themselves to a host of various manufacturers' direct mount accessories. Solenoid valves, limit switches, positioners, etc. bolt directly to the actuator and in turn reduces the cost of assembly and installation of automated packages. Flexibility for future system modifications is greatly enhanced.

QUALITY

Each part of the actuator must pass a stringent quality test before it can be incorporated into an assembly. All materials used in construction must be certified and tested to prove their proper composition. After machining, every part is dimensionally evaluated to assure it meets acceptable tolerance.

SAFETY

All actuator bodies and end caps are investment cast stainless steel, rugged and built to last. Thick wall castings mean protection for actuator internal porting and components as well as maintenance and operating personnel. Our unique drive pinion design ensures blowout proof protection. Spring retainers are incorporated to allow safe removal of end caps during spring torque rating change or rebuild process.

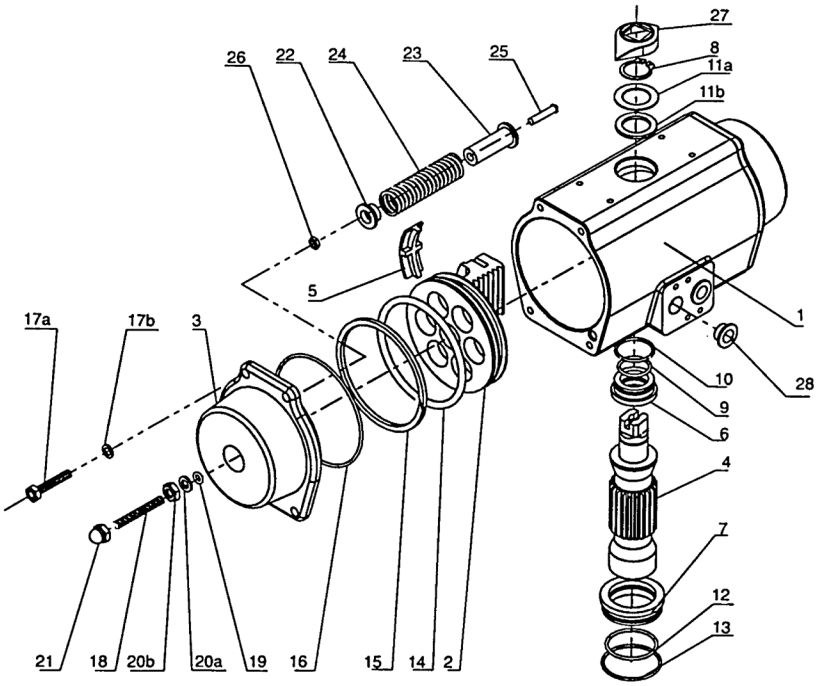

	PART	QTY	MATERIAL
1	Body	1	304 Stainless Steel
2	Piston	2	303 Stainless Steel
3	End Caps-Double Acting	2	Stainless Steel
4	Drive Pinion	1	17-4 Stainless Steel
5	Guide Bearing Plate	2	Nylon 6
6	Pinion Bearing Top	1	Teflon
7	Pinion Bearing Bottom	1	Teflon
8	Snap Ring	1	Stainless Steel
9	O-Ring-Inner Top	1	Viton
10	O-Ring-Outer Top	1	Viton
11a	Washer	1	Stainless Steel
11b	Bearing	1	Nylon 6
12	O-Ring-Inner Bottom	1	Viton
13	O-Ringer-Outer Bottom	1	Viton
14	O-Ring-Piston	2	Viton
15	Bearing-Piston	2	Nylon 6

	PART	QTY	MATERIAL
16	O-Ring-End Cap	2	Nitrile
17a	Bolts-End Cap	8	18-8 Stainless Steel
17b	Spring Bearing	8	Stainless Steel
18	Adjusting Travel Stop	2	Stainless Steel
19	O-Ring-Travel Stop	2	Nitrile
20a	Washer	2	Stainless Steel
20b	Nut-Travel Stop	2	Stainless Steel
21	End Nut-Travel	2	Stainless Steel
22	Spring Retainer (S)	*	Nylon 6
23	Spring Retainer (L)	*	Nylon 6
24	Spring	*	Plated CS
25	Spring Screw	*	Stainless Steel
26	Spring Nut	*	Stainless Steel
27	Positioner Indicator	1	Nylon
28	Plug	2	Nylon 6

Customer Service (704) 841-6000 www.apollovalves.com
WE RESERVE THE RIGHT TO CHANGE BOX QUANTITIES
aalberts integrated piping systems

STAINLESS STEEL ACTUATORS

DIMENSIONAL DATA

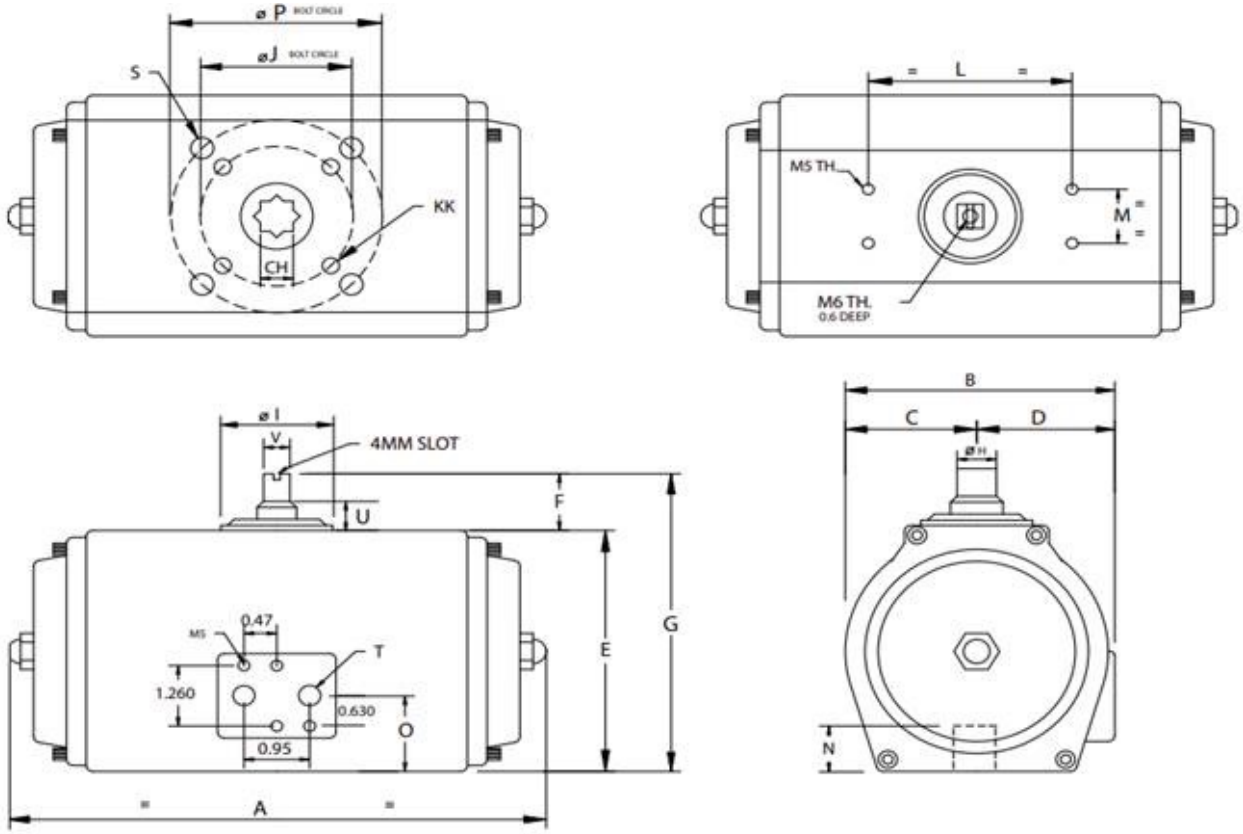

ACTUATOR MODEL	A	B	C	D	E	F	G	CH	J
3SS045X0A 3SD04500A	7.56	2.56	1.15	1.15	2.56	0.787	3.34	0.433	1.42
3SS060X0A 3SD06000A	7.34	2.92	1.39	1.39	3.18	0.787	3.97	0.551	1.97
3SS085X0A 3SD08500A	8.37	3.97	1.91	1.91	4.24	0.787	5.03	0.669	1.97
3SS105X0A 3SD10500A	10.53	4.75	2.29	2.29	5.23	0.787	6.02	0.866	2.76
3SS125X0A 3SD12500A	12.2	5.39	2.69	2.69	6.09	1.181	7.27	0.866	2.76
3SS140X0A 3SD14000A	19.29	6.26	3.11	3.11	6.89	1.181	8.07	1.063	4.02
3SS160X0A 3SD16000A	21.1	6.85	3.43	3.43	7.76	1.181	8.94	1.063	4.02

ACTUATOR MODEL	L	N	M	P	S	T	V	KK
3SS045X0A 3SD04500A	3.15	0.58	1.181	1.97	M6 x 10	1/4" NPT	0.633	M5 x 8
3SS060X0A 3SD06000A	3.15	0.59	1.181	N/A	M6 x 10	1/4" NPT	0.633	n/a
3SS085X0A 3SD08500A	3.15	0.66	1.181	2.76	M8 x 13	1/4" NPT	0.635	M6 x 10
3SS105X0A 3SD10500A	3.15	0.77	1.181	N/A	M8 x 13	1/4" NPT	0.629	n/a
3SS125X0A 3SD12500A	5.12	0.97	1.181	4.02	M10 x 16	1/4" NPT	0.865	M8 x 13
3SS140X0A 3SD14000A	5.12	1.18	1.181	4.92	M12 x 20	1/4" NPT	0.865	M10 x 16
3SS160X0A 3SD16000A	5.12	1.18	1.181	4.92	M12 x 20	1/4" NPT	0.865	M10 x 16

STAINLESS STEEL ACTUATORS

TECHNICAL DATA

ACTUATOR MODEL	VOLUME (IN^2 PER 90° CYCLE)	AIR CONSUMPTION (SCF PER 90° ROTATION)*		WEIGHT (LB)
		CW	CCW	
3SS045X0A	45	8.5	6.5	9
3SS060X0A	60	17.5	14.8	16
3SS085X0A	85	36.5	24.5	23
3SS105X0A	105	72	49.3	37
3SS125X0A	125	196	147	52
3SS140X0A	140	358	278	75
3SS170X0A	170	542	382	188
3SS210X0A	210	753	470	258

Notes: *Temperature and atmospheric conditions could change values above.

ACTUATOR WEIGHTS

ACTUATOR MODEL	DA (LBS)	SR (LBS)
3SS045	5.0	5.5
3SS060	8.0	8.5
3SS085	14.0	14.5
3SS105	25.5	27.0
3SS125	38.5	40.5
3SS140	63.5	65.5
3SS160	80.0	83.0

DOUBLE ACTING TORQUE (IN LBS)

ACTUATOR MODEL	40 PSI	60 PSI	80 PSI	100 PSI	120 PSI
3SD04500A	71	107	143	178	214
3SD06000A	171	256	342	427	512
3SD08500A	370	555	740	925	1,110
3SD10500A	624	936	1,249	1,561	1,873
3SD12500A	1,214	1,822	2,429	3,036	3,643
3SD14000A	2,034	3,051	4,068	5,085	6,102
3SD16000A	3,102	4,653	6,204	7,755	9,306

SPRING RETURN TORQUE

ACTUATOR MODEL	SPRING SET#*	SPRING STROKE		TORQUE (INCH/LB) VS. AIR SUPPLY PRESSURE (PSI)							
				40		60		80		100	
		END	BREAK	END	BREAK	END	BREAK	END	BREAK	END	BREAK
3SS045X0A	3	35	57	14	36	50	72	86	108	121	143
	4	47	77			30	60	66	96	101	131
	5	60	96					47	83	82	118
	6	71	115							63	107
3SS060X0A	3	67	136	35	104	120	189	206	375	291	360
	4	90	182			94	166	160	252	245	337
	5	119	207					125	230	200	315
	6	135	273							154	292
3SS085X0A	3	167	273	106	203	282	388	467	573	652	758
	4	223	364			191	332	376	517	561	702
	5	279	430					284	461	429	646
	6	335	523							378	590
3SS105X0A	3	346	574	65	278	362	590	675	903	987	1,215
	4	461	766			170	475	483	788	795	1,110
	5	576	956					293	673	605	985
	6	692	1,141							420	869
3SS125X0A	3	651	941	336	563	881	1,171	1,288	1,778	1,895	2,385
	4	760	1,222			689	953	1,105	1,560	1,514	2,167
	5	1,080	1,602					927	1,349	1,134	1,956
	6	1,301	1,790							1,153	1,735
3SS140X0A	3	808	1,359	655	1,226	1,592	2,243	2,517	3,260	3,525	4,277
	4	1,071	2,087			1,200	1,980	1,983	2,997	3,166	4,014
	5	1,345	2,607					1,755	2,623	2,625	3,740
	6	1,610	3,026							2,340	3,475
3SS160X0A	3	1,522	2,098	895	1,580	2,420	3,131	4,022	4,682	4,657	6,233
	4	2,035	3,133			1,720	2,618	3,122	4,169	4,822	5,720
	5	2,550	3,690					2,467	3,654	3,588	5,205
	6	3,054	4,893							3,333	4,701

* X in Actuator Model is Spring Set

SCOTCH-YOKE ACTUATORS

G SERIES

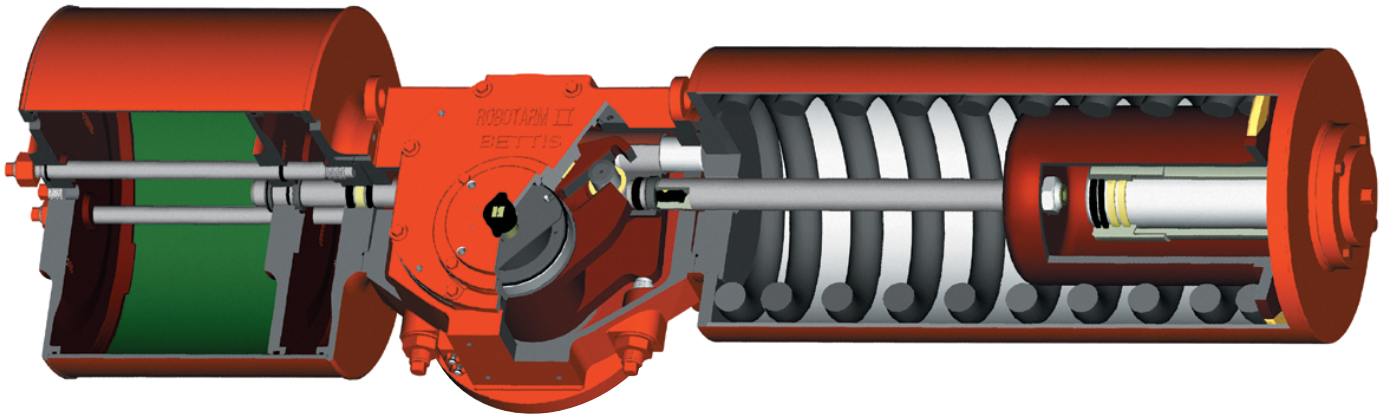

NAMUR

The shaft driven accessory interface conforms to the NAMUR standard and is identical on all G-Series actuators, allowing for standardization of accessory mounting hardware and installation practices

- Pneumatic and hydraulic scotch-yoke actuators
- Automates ball, butterfly, plug valves and any other 90° rotating mechanisms
- Salt Spray Testing per ASTM B117 criteria. Construction features prevent water ingress, allowing G-Series actuators to meet IP 66 and IP 67M specifications and severe high pressure water deluge test.

OPERATING RANGES

G-Series double acting actuators produce guaranteed minimum torque outputs from 10,000 lb-in. up to 6,000,000 lb-in. The spring return units produce spring torques from 2,500 lb-in. to 3,000,000 lb-in.

- Standard operating pressures:
- Pneumatic — to 200 psig (14 BAR)
- Standard operating temperature is -20°F to +200°F (-29°C to +93°C)
- Optional trims available:
  0°F to +350°F (-18°C to +177°C)
  -50°F to +180°F (-46°C to +82°C)
- Mechanical and hydraulic manual overrides are available
- MSS and ISO Valve Mounting
  The G-Series valve interface meets the dimensional requirements of MSS SP-101 or ISO 5211 defined for each torque range

DOUBLE ACTING G1 PNEUMATIC ACTUATOR TORQUE CHART

APOLLO MODEL NO.	REFERENCE NUMBER	STROKE POSITION	OPERATING PRESSURE (PSIG)											
			40	50	60	70	80	90	100	110	120	150	175	200
			OUTPUT TORQUE (IN-LBS)											
3TG100800	G01008	Start/End	12465	14543	16620	18698	20775	22853	24930	31163	36356	41550		
		Minimum			6579	7675	8772	9868	10965	12061	13158	16447	19188	21929
3TG100900	G01009	Start/End	10593	13241	15890	18538	21186	23835	26483	29131	31779	39724		
		Minimum	5591	6989	8386	9784	11182	12579	13977	15375	16772	20966		
3TG101000	G01010	Start/End	14046	17557	21069	24580	28092	31603	35115	38626				
		Minimum	7413	9266	11120	1973	14826	16680	18533	20386				
3TG101200	G01012	Start/End	20133	25166	30199	35232								
		Minimum	10626	13282	15938	18595								
3TG101400	G01014	Start/End	24482	30603	36723									
		Minimum	12921	16152	19382									

Customer Service (704) 841-6000
www.apollovalves.com
WE RESERVE THE RIGHT TO CHANGE BOX QUANTITIES
aalberts integrated piping systems

SCOTCH-YOKE ACTUATORS

TORQUE RATING - G SERIES

All published torques are guaranteed minimum values.

G SERIES PNEUMATIC DOUBLE-ACTING ACTUATOR TORQUE CHART

APOLLO MODEL NO.	REFERENCE NUMBER	STROKE POSITION	OPERATING PRESSURE (PSIG)											
			40	50	60	70	80	90	100	110	120	150	175	200
			OUTPUT TORQUE (IN-LB)											
3TG200900	G2009	Start/End				22441	25647	28852	32058	35264	38470	48087	56102	
		Minimum			11844	13536	15228	16920	18612	20304	25379	29609		
3TG201000	G2010	Start/End		21254	25504	29755	34006	38257	42507	46758	51009			
		Minimum		11217	13461	15704	17948	20191	22434	24678	26921			
3TG201200	G2012	Start/End	24371	30464	36556	42649	48742	54835	60927					
		Minimum	12862	16078	19294	22509	25725	28941	32156					
3TG201400	G2014	Start/End	29636	37046	44455	51864	59273							
		Minimum	15641	19552	23462	27373	31283							
3TG201600	G2016	Start/End	39118	48897	58677									
		Minimum	20646	25807	30968									
3TG301000	G3010	Start/End				35888	41015	46142	51269	56396	61523	76903	89721	102538
		Minimum				18941	21647	24353	27059	29764	32470	40588	47352	54117
3TG301200	G3012	Start/End		36847	44216	51585	58955	66324	73693	81063	88432			
		Minimum		19447	23336	27226	31115	35004	38894	42783	46672			
3TG301400	G3014	Start/End	35887	44859	53831	62803	71775	80747	89719	98690				
		Minimum	18941	23676	28411	33146	37881	42616	47351	52087				
3TG301600	G3016	Start/End	47430	59288	71145	83003	94860							
		Minimum	25033	31291	37549	43807	50065							
3TG302000	G3020	Start/End	75266	94082										
		Minimum	39724	49654										

SPRING RETURN G1 PNEUMATIC ACTUATOR TORQUE CHART

APOLLO MODEL NO.	REFERENCE NUMBER	SPRING TORQUE (IN-LB) START/MIN/END	OPERATING PRESSURE (PSIG)											
			40	50	60	70	80	90	100	110	120	150	175	200
			OUTPUT TORQUE START/MIN/END (IN-LB)											
3TG100804	G01008-SR4	11614					5551	7628	9706	11783	13861	20093	25287	30481
		5708					2439	3543	4648	5752	6849	10138	12880	15621
		10015					3783	5861	7938	10016	12093	18326	23520	28713
3TG100904	G01009-SR4	11614			4820	7469	10117	12765	15414	18062	20710	28655		
		5708			2051	3459	4866	6271	7669	9066	10464	14657		
		10015			3053	5701	8350	10998	13646	16295	18943	26888		
3TG101004	G1010-SR4	11614		6488	10000	13511	17023	20534	24046	27557				
		5708		2938	4804	6664	8518	10371	12224	14078				
		10015		4721	4232	11744	15255	18767	22278	25790				
3TG101204	G01012-SR4	11614	9063	14096	19130	24163								
		5708	4306	6973	9630	12286								
		10015	7296	12329	17362	22395								
3TG101404	G01014-SR4	11614	13413	19534	25654									
		5708	6613	9843	13073									
		10015	11646	17766	23887									
3TG100803	G01008-SR3	13598						6048	8126	10203	12281	18513	23707	28901
		6605						2523	3631	4735	5839	9143	11884	14625
		11445						3669	5746	7824	9901	16434	21327	26521
3TG100903	G01009-SR3	13598	`			5889	8537	11185	13834	16482	19130	27075		
		6605				2437	3850	5257	6665	8071	9469	13662		
		11445				3509	6157	8806	11454	14102	16751	24695		
3TG101003	G01010-SR3	13598		4908	8420	11931	15443	18954	22466	25977				
		6605		1904	3787	5653	7520	9376	11229	13082				
		11445		2529	6040	9552	13063	16574	20086	23597				
3TG101203	G01012-SR3	13598	7483	12516	17550	22583								
		6605	3289	5964	8634	11291								
		11445	5104	10137	15170	20203								
3TG101403	G01014-SR3	13598	11833	17954	24074									
		6605	5601	8848	12078									
		11445	9453	15574	21695									

SPRING RETURN G1 PNEUMATIC ACTUATOR TORQUE CHART (CONT.)

APOLLO MODEL NO.	REFERENCE NUMBER	SPRING TORQUE (IN-LB) START/MIN/END	OPERATING PRESSURE (PSIG)											
			40	50	60	70	80	90	100	110	120	150	175	200
			OUTPUT TORQUE START/MIN/END (IN-LB)											
3TG100802	G01008-SR2	15526								8443	10521	16753	21947	27141
		7352								3692	4796	8109	10857	13598
		13037								5692	7770	14002	19196	24390
3TG100902	G01009-SR2	15526					6777	9425	12074	14722	17370	25315		
		7352					2800	4214	5622	7029	8437	12635		
		13037					4026	6674	3923	11971	14619	22564		
3TG101002	G01010-SR2	15526			6660	10171	13683	17194	20706	24217				
		7352			2736	4611	6477	8348	10202	12055				
		13037			3909	7420	10932	14443	17955	21466				
3TG101202	G01012-SR2	15526	5723	10756	15789	20823								
		7352	2228	4922	7597	10264								
		13037	2972	8005	13039	18072								
3TG101402	G01014-SR2	15526	10073	16194	22314									
		7352	4559	7811	11051									
		13037	7322	13443	19563									
3TG100801	G0108-SR1	18470									8599	14831	20025	25219
		8749									3364	6703	9463	12223
		14776									4516	10748	15942	21136
3TG100901	G0109-SR1	18470						7503	1152	12800	15448	23393		
		8749						2764	4207	5623	7030	11253		
		14776						3420	6069	8717	11365	19310		
3TG101001	G01010-SR1	18470				8249	11761	15272	18784	22295				
		8749				3174	5071	6937	8803	10669				
		14776				4166	7678	11189	14701	18212				
3TG101201	G01012-SR1	18470		8834	13868	18901								
		8749		3492	6190	8865								
		14776		4752	9785	14818								
3TG101401	G01014-SR1	18470	8151	14272	20392									
		8749	3121	6405	9658									
		14776	4068	10189	16309									

SCOTCH-YOKE ACTUATORS

TORQUE RATING - G SERIES

All published torques are guaranteed minimum values.

SPRING-RETURN ACTUATOR

APOLLO MODEL NO.	REFERENCE NUMBER	SPRING TORQUE (IN-LB) START/MIN/END	OPERATING PRESSURE (PSIG)								
			40	50	60	70	80	90	100	110	120
			OUTPUT TORQUE START/MIN/END (IN-LB)								
3TG200902	G2009-SR2	26818									14072
		12882									5964
		22074									8829
3TG201002	G2010-SR2	26818						13859	18810	22361	26611
		12882						5848	8110	10369	12628
		22074						8616	12866	17117	21368
3TG201202	G2012-SR2	26818			12159	18252	24344	30437	36530		
		12882			4926	8185	11423	14661	17896		
		22074			6915	13008	19101	25194	31286		
3TG201402	G2014-SR2	26818		12648	20057	27466	34875				
		12882		5191	9145	13082	17020				
		22071		7404	14814	22223	29632				
3TG201602	G2016-SR2	26818	14720	24500	34279						
		12882	6308	11506	16703						
		22074	9477	19256	29036						
3TG200901	G2009-SR1	30997									
		14742									
		25004									
3TG201001	G2010-SR1	30997							14871	19122	23373
		14742							5957	8249	10508
		25004							8248	12498	16749
3TG201201	G2012-SR1	30997					21106	27199	33291		
		14742					9303	12541	15779		
		25004					14482	20575	26668		
3TG201401	G2014-SR1	30997			16819	24228	31637				
		14742			7014	10962	14900				
		25004			10195	17604	25013				
3TG201601	G2016-SR1	30997		21261	31041						
		14742		9386	14583						
		25004		14638	24417						
3TG200904	G2009-SR4	20678						10155	13361	16567	19772
		9903						4185	5900	7603	9307
		16917						5998	9204	12410	15616
3TG201004	G2010-SR4	20678				11058	15308	19559	23810	28061	32311
		9903				4675	6935	9194	11453	13712	15956
		16917				6901	11152	15402	19653	23904	28155
3TG201204	G2012-SR4	20678		11766	17859	23952	30044	36137	42230		
		9903		5052	8290	11528	14760	17975	21191		
		16917		7609	13702	19795	25888	31980	38073		
3TG201404	G2014-SR4	20678	10939	18348	25757	33166	40575				
		9903	4610	8550	12488	16407	20318				
		16917	6782	14191	21600	29009	36419				
3TG201604	G2016-SR4	20678	20420	30200	39979						
		9903	9652	14842	20003						
		16917	16264	26043	35823						
3TG200903	G2009-SR3	24139								13833	17039
		11457								5833	7539
		19390								8584	11790
3TG201003	G2010-SR3	24139					12575	16826	21077	25327	29578
		11457					5150	7426	9685	11944	14203
		19390					7326	11577	15828	20078	24329
3TG201203	G2012-SR3	24139			15126	21219	27311	33404	39497		
		11457			6522	9760	12998	16236	19460		
		19390			9877	15970	22062	28155	34248		
3TG201403	G2014-SR3	24139		15615	23024	30433	37842				
		11457		6782	10720	14657	18587				
		19390		10366	17775	25184	32593				

SPRING-RETURN ACTUATOR (CONT.)

APOLLO MODEL NO.	REFERENCE NUMBER	SPRING TORQUE (IN-LB) START/MIN/END	OPERATING PRESSURE (PSIG)								
			40	50	60	70	80	90	100	110	120
			OUTPUT TORQUE START/MIN/END (IN-LBS)								
3TG201603	G2016-SR3	24139	17687	27467	37246						
		11457	7883	13081	18273						
		19390	12438	22218	31997						
3TG301002	G3010-SR2	49017									20655
		22571									6848
		36975									7346
3TG301202	G3012-SR2	49017						25456	32826	40195	47564
		22571						9568	13568	17516	21433
		36975						12147	19516	26886	34255
3TG301402	G3014-SR2	49017				21936	30907	39879	48851	57823	
		22571				7591	12527	17349	22117	26885	
		36975				8626	17598	26570	35542	44514	
3TG301602	G3016-SR2	49017			30278	42135	53993				
		22571			12185	18548	24849				
		36975			16968	28826	40683				
3TG302002	G3020-SR2	49017	34398	53215							
		22571	14422	24436							
		36975	21089	39905							
3TG301001	G3010-SR1	54045									
		25307									
		42224									
3TG301201	G3012-SR1	54045							27024	34394	41763
		25307							10497	14497	18420
		42224							13960	21329	28698
3TG301401	G3014-SR1	54045					25106	34078	43050	52022	
		25307					9456	14326	19104	23873	
		42224					12041	21013	29985	38957	
3TG301601	G3016-SR1	54045			24476	36334	48191				
		25307			9107	15535	21837				
		42224			11412	23269	35127				
3TG302001	G3020-SR1	54045	28597	47413							
		25307	11351	21423							
		42224	15532	34349							
3TG301004	G3010-SR4	36568							19695	24822	29949
		17123							7867	10637	13361
		28566							10851	15978	21105
3TG301204	G3012-SR4	36568				20012	27381	34751	42120	49489	56858
		17123				8038	11996	15913	19830	23746	27663
		28566				11168	18537	25906	33276	40676	48014
3TG301404	G3014-SR4	36568			22258	31239	40201	49173	58145	67117	
		17123			9257	14042	18810	23578	28347	33089	
		28566			13414	22385	31357	40329	49301	58273	
3TG301604	G3016-SR4	36568	15857	27714	39572	51429	63287				
		17123	5764	12174	18475	24777	31068				
		28566	7013	18870	30728	42585	54443				
3TG301003	G3010-SR3	42128								20609	25735
		19573								7746	10528
		32379								9833	14960
3TG301203	G3012-SR3	42128					23167	30537	37906	45275	52645
		19573					9135	13115	17032	20949	24865
		32379					12392	19761	27130	34500	41869
3TG301403	G3014-SR3	42128			18044	27016	35988	44960	53931	62903	
		19573			6305	11223	16012	20781	25549	30317	
		32379			7268	15240	25212	34184	43156	52127	
3TG301603	G3016-SR3	42128		23501	35358	47216	59073				
		19573		9315	15678	21980	28282				
		32379		12725	24582	36440	48297				
3TG302003	G3020-SR3	42128	39479	58295							
		19573	17868	27868							
		32379	28703	47519							

AE SERIES

FEATURES

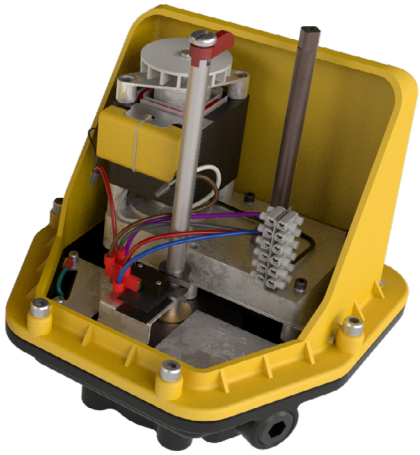

Ruggedly built and designed for easy installation, new Apollo AE Series electric actuators deliver the most standard features and performance in their class. Now CSA listed all sizes as standard.

FIVE OUTPUT TORQUES, ONE HOUSING

- 200, 400, 600, 800 and 1,000 inch-pounds
- Long service life
- Anodized die cast aluminum housing
- Fiberglass reinforced nylon cover resists corrosion
- Nitrile gasket and seals cover all penetration points in housing and cover
- Precision cut and heat treated alloy spur gears
- Permanently lubricated enclosed gear train
- NEMA 4, 4X

EASY TO USE

- Two separate 1/2" NPT conduit entrances for easier wiring and signal separation
- 12-position pre-wired terminal strip includes standard connections for remote open/closed position indicators; lots of room for wiring options
- Unrestricted mounting orientation
- Built-in thermal overload protection in all AC motor actuators
- Limit switches have an 11 amp rating at 115 VAC
- High visibility valve position indicator standard on all models

4-20MA POSITIONER FEATURES (P - OPTION)

Advanced Protection Features

- Stall Detection - Motor will not burn out from stalling
- Fault Signal - Fault LED on DHC-100 front panel
- Duty Cycle Protection - Allows actuators rated for 25% duty, or more, to be safely modulated. Activates prior to tripping of thermal overload protector, which prevents long shut down periods due to tripping thermal overload protector; allows the actuator to continue to move to set-point at a 25% duty cycle speed

Performance Features

- High Resolution (± 0.1°) 450 points of resolution on a 1/4 turn valve
- Dynamic Braking - Stops motor before changing actuator direction. Stops motor before mechanical brake engages, which reduces break wear
- Adaptive Control - Designed to maintain high resolution and accuracy by continuously monitoring and compensating for actuator backlash, motor coast, and load changes to eliminate positioner deadband

MANY STANDARD FEATURES

- Stainless steel push-and-turn manual override shaft, position indicator shaft and female output
- ISO 5211 F07 drive output reduces inventory of mounting kits
- 115 AC & 220 AC models feature a 25% duty cycle below 100˚F (24AC — 20% duty cycle below 100˚F)
- 12 and 24 DC — all DC voltage models provide 100% duty cycle for 1 hour after which DC motor is reduced to 80% duty cycle.
- Reversible rotation

BROAD TEMPERATURE RANGE

- Operates from -40˚F (when equipped with 15 watt heater and thermostat) to 150˚F

AVAILABLE OPTIONS

- Actuators can be ordered with one, two or three additional limit switches
- For low temperatures: actuators can be equipped with a thermostatically controlled heater element
- Motor brake is necessary when mounting actuator to a butterfly valve

4-20MA POSITION TRANSMITTER FEATURES (T - OPTION)

- High Resolution Feedback Transmitter - Provides voltage or mA output that can be set for any range (0 to 10 VDC in 0.0016 V steps or 0 to 20 mA in 0.0031 mA steps)
- Auto/Manual Station (Local Control Unit - LCU)
- Polarity Detection

AE SERIES

GENERAL SPECIFICATIONS & DIMENSIONS

ACTUATOR MODEL	BREAKAWAY TORQUE OUTPUT (IN.-LB)	CYCLE TIME 90˚ TRAVEL (50% LOAD)	DUTY CYCLE	AMPERAGE DRAW (MAX.) STARTING OR LOCKED ROTOR CURRENT VOLTAGE			
				115 VAC	230 VAC	12 VDC	24 VDC
AE200	200 in-lbs	5.0 sec.	25%	.74 amp	.44 amp	1.6 amp	1.7 amp
AE400	400 in-lbs	10.0 sec.	25%	.74 amp	.44 amp	1.6 amp	1.7 amp
AE600	600 in-lbs	15.0 sec.	25%	.74 amp	.44 amp	1.6 amp	1.7 amp
AE800	800 in-lbs	20.0 sec.	25%	.74 amp	.44 amp	1.6 amp	1.7 amp
AE1000	1000 in-lbs	25.0 sec	25%	.74 amp	.44 amp	1.6 amp	1.7 amp

Note: 90˚ travel = travel from closed position to open position or vice versa.
DC current draw is at max. torque
24 VAC current draw at locked rotor 4.6 amp

Motor	AC models: 120 VAC or 230 VAC, Reversible 3 wire, capacitor run. Self-resetting (thermal) overload protection, Class B insulation, sub-fractional horsepower.
	DC models: 12 VDC or 24 VDC, Reversible 2 wire, POS & NEG. No thermal overload (external circuit breaker or fuse suggested for protection.)
Lubrication	Permanently lubricated gear train and bearings
Duty Cycle	The AE-Series actuators are designed to operate at 25% duty cycle at temperatures below 100˚F. See Electrical Operation. (24 AC-20% duty cycle below 100˚F)
Temperature Operating	32˚F to 150˚F Max
Range	-40˚F to 150˚F with optional heater & thermostat
Thermal Protection	Self-resetting (AC Motors Only)
Conduit Connections	(2) 1/2"-NPT female
Direction Of Travel	Clockwise to Close, Counterclockwise to Open (Position indicator shaft only, manual override shaft rotates opposite)

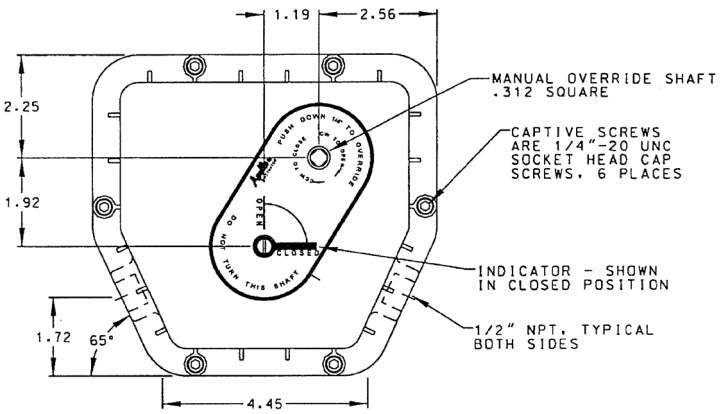

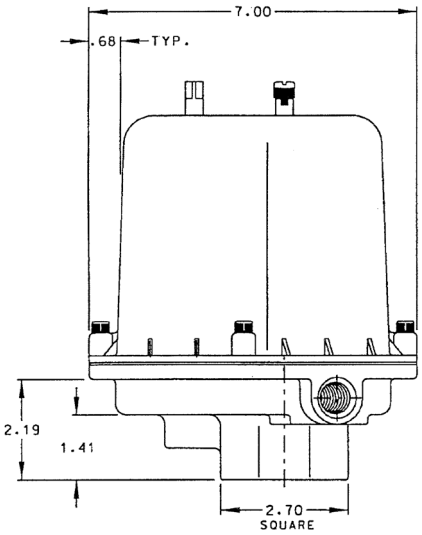

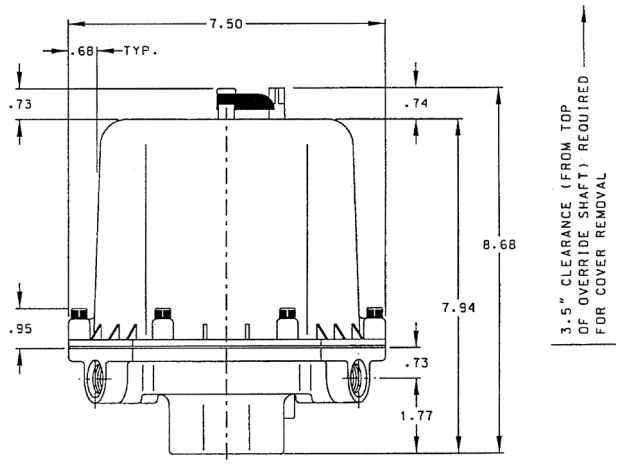

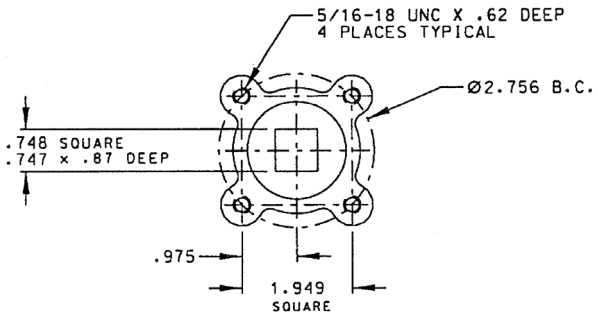

MOUNTING PATTERN ISO 5211 - F07

Customer Service (704) 841-6000

www.apollovalves.com

WE RESERVE THE RIGHT TO CHANGE BOX QUANTITIES

aalberts integrated piping systems

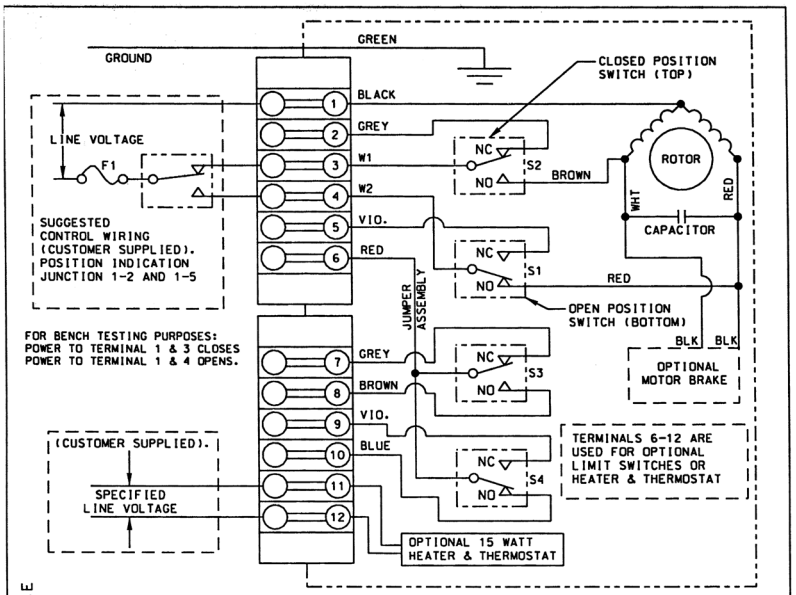

LINE VOLTAGE	W1	W2	F1 OPTIONAL
24 VAC 60 HZ 1PH	RED	BLUE	5 AMP
115 VAC 60 HZ 1PH	RED	BLUE	1 AMP
230 VAC 60 HZ 1PH	YELLOW	BLUE	.75 AMP

DUE TO HIGH AC INDUCTION FEEDBACK VOLTAGE THROUGH THE CAPACITOR AND TERMINALS 3 & 4. MULTIPLE ACTUATORS CANNOT BE WIRED IN PARALLEL. SEPERATE RELAYS (ISOLATED CONTACTS) MUST BE PROVIDED FOR EACH ACTUATOR. DEVICES CONNECTED TO TERMINALS 3 & 4 MUST BE RATED FOR 250 VAC OR (440 VAC FOR 230 VAC OPERATION VOLTAGE.)

24/115/230 VAC Wiring Diagram

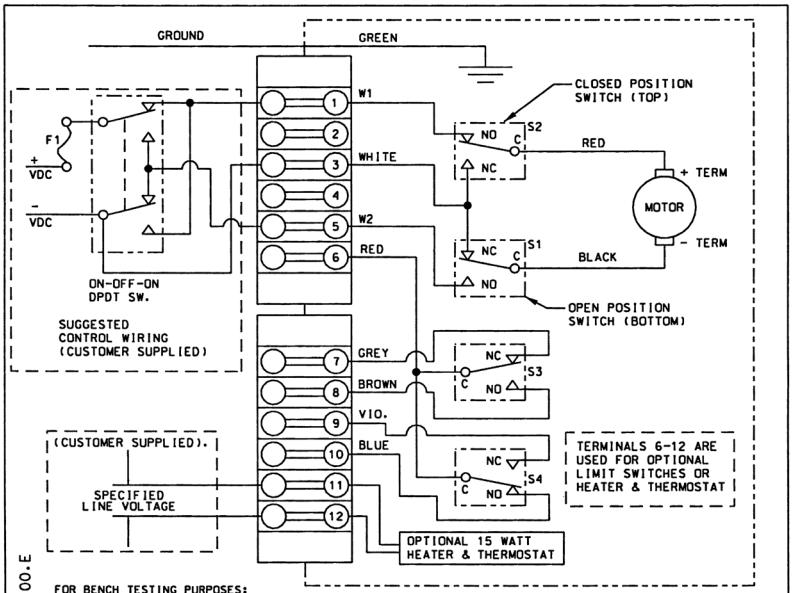

FOR BENCH TESTING PURPOSES:
TO OPEN: JUMP TERMINALS 1 & 3 ONLY
CONNECT NEGATIVE (-) TO: TERMINAL 1
CONNECT POSITIVE (+) TO: TERMINAL 5

TO CLOSE: JUMP TERMINALS 3 & 5 ONLY
CONNECT NEGATIVE (-) TO TERMINAL 3
CONNECT POSITIVE (+) TO TERMINAL 1

LINE VOLTAGE	W1	W2	F1 OPTIONAL
12 VDC	ORANGE	BLUE	3 AMP
24 VDC	BROWN	BLUE	1.5 AMP

12/24 VDC Wiring Diagram

AE SERIES

HOW TO ORDER

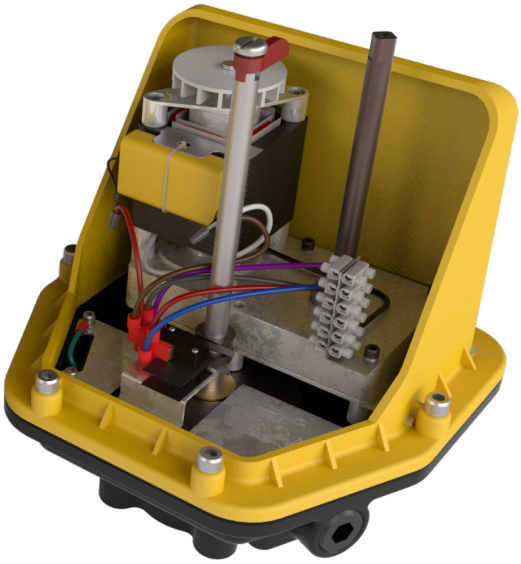

AE -	400 -	3	BF
PREFIX	TORQUE (IN - LB)	VOLTAGE	OPTIONS
AE	200	1 - 115 VAC	0 - STANDARD
	400	2 - 24 VAC	A - ONE EXTRA SWITCH & CAM*
	600	3 - 220 VAC	B - TWO EXTRA SWITCHES & CAMS*
	800	4 - 12 VDC	C - THREE EXTRA SWITCHES AND CAMS*
	1000	5 - 24 VDC	D - HEATER AND THERMOSTAT (15 WATT)
	ENTER ALL DIGITS OF TORQUE VALUE		F - MOTOR BRAKE (115 VAC & 24 VAC ONLY)
			H - TROPICAL HEATER (15 WATTS)
			P - POSITIONER 4-20 MA
			T - TRANSMITTER 4-20 MA

Note: AE will always be the first two characters of the part number, all digits from torque value must be entered into part number (i.e. 400, 1000, etc.) Only use one digit for voltage depiction (i.e. 1-5). For the options listing you may use more than one character, up to three, (i.e. O, AD or BD etc.)

1 Year warranty on positioner & positioner with transmitter
Transmitter available with (P) positioner option only
Positioner & transmitter are not CSA listed
* Not available with "P" option

EXAMPLE
AE-400-2BF:
400 in-lb.; 24 VAC; 2 extra switches and cams, motor brake

AE-1000-1D:
1000 in-lb.; 115 VAC; Heater and thermostat

Customer Service (704) 841-6000
www.apollovalves.com
WE RESERVE THE RIGHT TO CHANGE BOX QUANTITIES

CS & CL SERIES

FEATURES

CS and CL electric actuators are split phase reversing AC motors for standard duty or brushless DC Motors for continuous duty. Eight sizes are available which produce breakaway torques between 150 and 3000 lb-in. They are excellent industrial quality units capable of on/off, fail safe, and modulating applications. The efficient spur gear drive train is supported by permanently-lubricated bearings making it very secure while eliminating the potential for side loading of the output shaft.

Apollo offers as standard a 75% duty cycle AC motor. Continuous-duty brushless DC motors are also available for a range of input voltages. All units are rated for use in ambient environments from -40°F (with optional heater & thermostat) to 150°F (note that units equipped with an internal battery are rated to 130°F).

HAZARDOUS LOCATION ENCLOSURES

The standard enclosures (CS and CL) are rated for NEMA 4/4X (weather tight and corrosion resistant). The Hazardous Location enclosures are rated for NEMA 4/4X/7 & 9, Class I, Div 1, Groups C&D; Class II, Div. 2, Groups E, F, & G; Class III.

(CSA) CERTIFICATIONS

Certification by the Canadian Standards Association of either hazardous or weatherproof locations is standard on all CS & CL models.

FEATURES

- Plug-in connectors for the motor, the brake option and the heater/thermostat option
- All connectors are coded to prevent mis-wiring.
- Limit switch wires are soldered to the board - no more loose connections.
- A six position terminal strip clearly labeled so it can be wired up in the
- ield without an instruction manual.
- Thermal overload protection (AC motors)
- Dual conduit openings; 3/4" (1/2" with supplied bushings)
- Visual position indication
- All aluminum enclosure
- Captive cover bolts on CS Series
- Manual override shaft (optional handwheel override with declutchable shaft)

CS & CL SERIES

DIMENSIONS

INTRODUCING SIMPLICITY FOR CALIBRATING MODULATING ACTUATORS

The control board brings a whole new level of simplicity to the field. It will work with either of the motor boards (115VAC or 230VAC).

FEATURES INCLUDE:

- Switch selector for 4-20mA or 0-10VDC input
- Switch selector for 4-20mA or 0-10VDC position readback
- Switch selector for either "fail in-place" or "fail to zero" upon loss of control signal (provided input power remains)
- On-board push buttons to manually position the actuator
- A "Mode Selector" switch with LEDs, which are used for:
  - "No tools" pot calibration
  - Setting Zero and span
  - Manually positioning the actuator
- An adjustable pot for speed control (motor pulsing)
- An adjustable pot for deadband adjustment
- Locked rotor protection if the actuator cannot achieve the position commanded by the control signal, it will cut power to the motor. Repeated stalls will not damage the actuator.
- Reverse acting operation with no rewiring.
- Split range operation with no rewiring.

CS DIMENSIONS

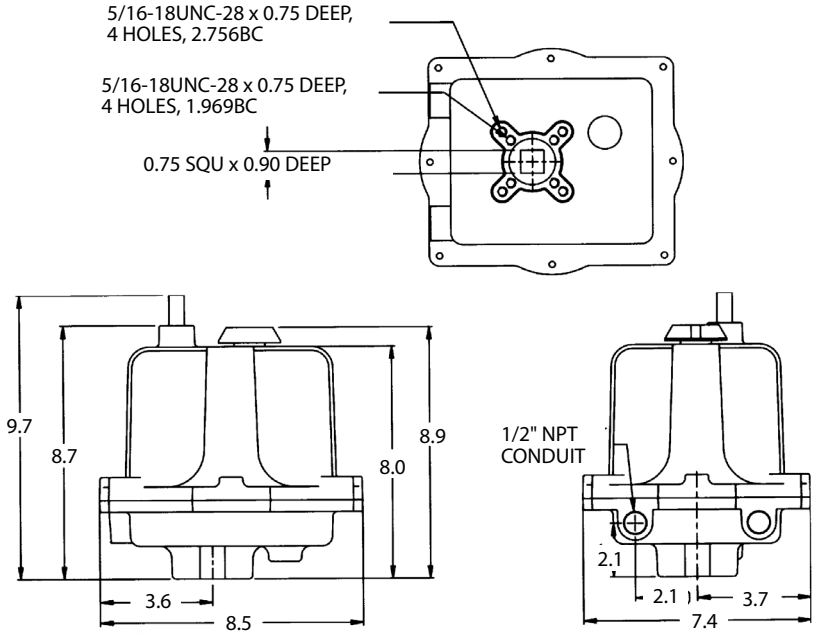

CL DIMENSIONS

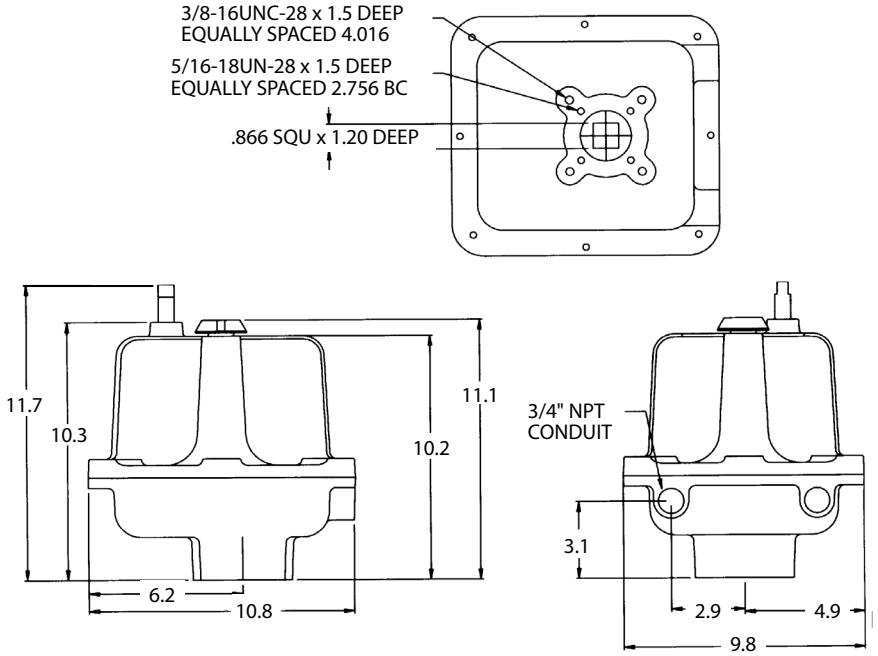

CS & CL EXTENDED DUTY DATA
TECHNICAL DATA—115VAC AND 230VAC MODELS*

SERIES	TORQUE OUTPUT (BREAKAWAY)	SPEED (SECONDS PER 90° ROTATION)	DUTY CYCLE	VA RATING		MAX RUNNING CURRENT AT FULL LOAD (TRUE RMS)		MAX EFFECTIVE PEAK INRUSH CURRENT (=.66 X PEAK INRUSH)	
				115 VAC	230 VAC	115 VAC	230 VAC	115 VAC	230 VAC
CS	150 in lb	8	75%	70vA	115vA	0.6 amps	0.5 amps	1.25 amps	0.924 amps
	300 in lb	15	75%	70vA	115vA	0.6 amps	0.5 amps	1.25 amps	0.924 amps
	600 in lb	30	75%	70vA	115vA	0.6 amps	0.5 amps	1.25 amps	0.924 amps
CL	1000 in lb	25	75%	92vA	161vA	0.8 amps	0.7 amps	1.66 amps	1.29 amps
	1500 in lb	40	75%	92vA	161vA	0.8 amps	0.7 amps	1.66 amps	1.29 amps
	2000 in lb	55	75%	92vA	161vA	0.8 amps	0.7 amps	1.66 amps	1.29 amps
	2500 in lb	70	75%	92vA	161vA	0.8 amps	0.7 amps	1.66 amps	1.29 amps
	3000 in lb	75	55%	92vA	161vA	0.8 amps	0.7 amps	1.66 amps	1.29 amps

CS & CL CONTINUOUS DUTY DATA

SERIES	TORQUE (IN-LB)	DUTY CYCLE	12 VDC		24 VDC		24 VAC		115 VAC		230 VAC	
			CYCLE TIME (SEC/90°)	CURRENT DRAW AMPS	CYCLE TIME (SEC/90°)	CURRENT DRAW AMPS	CYCLE TIME (SEC/90°)	CURRENT DRAW AMPS	CYCLE TIME (SEC/90°)	CURRENT DRAW AMPS	CYCLE TIME (SEC/90°)	CURRENT DRAW AMPS
CS	150	100%	11	2.2	13	1.2	8	1.8	9	0.4	9	0.4
	300	100%	17	2.5	13	1.4	12	2.1	13	0.5	13	0.4
	600	100%	17	2.8	13	1.7	13	2.5	14	0.6	14	0.5
CL	1000	100%	21	4	14	2.4	15	3.5	15	0.9	15	0.6
	1500	100%	40	4	24	2.4	27	3.5	29	0.9	29	0.6
	2000	100%	40	4.3	33	2.4	28	3.5	29	0.9	29	0.6
	2500	100%	55	3.3	40	2	38	3.1	39	0.8	39	0.6
	3000	100%	60	3.7	42	2.2	40	3.5	42	0.8	43	0.6

*Notes:
1. The Current Draws stated above include all options. If the brake and/or heater & thermostat are not installed, the actual current draws will be less.
2. For Extended Duty Cycle Models, Current Draws are provided at full running torque. If the actuator encounters an overtorque condition, such as a stall condition, the Current Draw will be vastly increased.
3. Continuous Duty actuators contain brushless DC motors and are therefore not limited by duty cycle restraints in environments at or below 104°F; in ambient environments above this temperature the duty cycle is de-rated to 80%.

ACTUATOR MODEL NUMNBERS/DESCRIPTION
- 115 — 115 VAC Motor (Standard or Continuous)
- 230 VAC — 230 VAC Motor (Standard or Continuous)
- J — Speed Control/Timer Board
- X — NEMA 4,4X,7 & 9
- W — NEMA 4 & 4X
- H — Tropical Heater
- S2 — Two Auxiliary Switches SPDT
- T — Heater and Thermostat
- K — Motor Brake[2]
- Z — Declutchable Handwheel Override
- P — Feedback Potentiometer (0-1000 Ohm)

• CSA certification with (C US) marking is standard on all standard (extended) duty models.
• CSA certification with (C US) marking is standard on continuous duty models ordered with enclosure option "E".
[2] Standard on continuous duty cycle units

HOW TO ORDER CS & CL EXTENDED DUTY CYCLE ACTUATOR

PART NUMBER MATRIX

SERIES	TORQUE	ENCLOSURE	GENERAL OPTIONS	DUTY CYCLE	VOLTAGE
CS	600	W	S2	E - STANDARD	115 VAC
CL	1500	X	S2	E - STANDARD	230 VAC

HOW TO ORDER CS CONTINUOUS DUTY CYCLE ACTUATOR

PART NUMBER MATRIX

3RA	CS	600	W	UL2	Z
PREFIX	SERIES	TORQUE	ENCLOSURE	OPTIONS[2]	ADDITIONAL OPTIONS
3RA	CS	150 IN-LB, 12 FT-LB, 17 NM	W - NEMA 4/4X	U2 - ON/OFF/POSITION BOARD	-- NO ENTRY IF STANDARD
		300 IN-LB, 25 FT-LB, 34 NM	X - NEMA 4/4X/7&9	UL2 - ON/OFF/POSITION BOARD	Z - HANDWHEEL
		600 IN-LB, 50 FT-LB, 68 NM		W/ BATTERY BACKUP	

HOW TO ORDER CL CONTINUOUS DUTY CYCLE ACTUATOR

PART NUMBER MATRIX

3RA	CL	2500	X	UL3	-
PREFIX	SERIES	TORQUE	ENCLOSURE	OPTIONS[2]	ADDITIONAL OPTIONS
3RA	CL	1000 IN-LB, 83 FT-LB, 113 NM	W - NEMA 4/4X	U2 - ON/OFF/POSITION BOARD	-- NO ENTRY IF STANDARD
		1500 IN-LB, 125 FT-LB, 169 NM	X - NEMA 4/4X/7&9	UL3 - ON/OFF/POSITION BOARD	Z - HANDWHEEL
		2000 IN-LB, 167 FT-LB, 226 NM		W/ BATTERY BACKUP	
		2500 IN-LB, 208 FT-LB, 282 NM			
		3000 IN-LB, 250 FT-LB, 339 NM			

1. All Continuous Duty Cycle CS/CL actuators accept any of the following input voltage (12VDC, 24VDC, 24VAC, 115VAC, & 230VAC), are rated for continuous duty cycle, include a holding brake, two auxiliary limit switches, 4-20mA or 0-10VDC position feedback, wrench-operated manual override, CSA "C US" certification, CE compliance, and a heater/thermostat that can be user-enabled on the option board.

2. Only one board option can (and must) be selected. All board options can be configured for On/Off or modulating operation.

LB SERIES

SPECIFICATIONS & OPTIONS

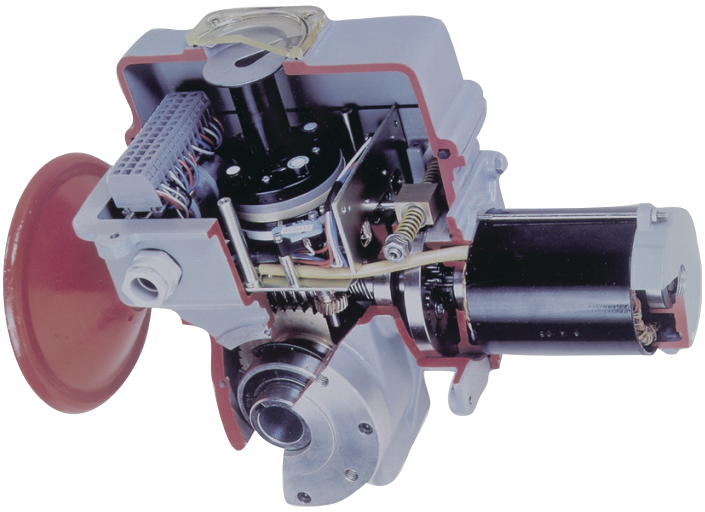

The LB-Series is available in several basic designs with a wide variety of configurations from which to select torque and speeds to meet specific application requirements. These rugged and uncomplicated actuators provide a practical and reliable method for turning any mechanism 90˚. Torques range from 540 inch-pounds to 54,000 inch-pounds (6.25 to 625 kilogram-meters). Electrical models are available in 115 VAC-50/60 Hz single phase, 200 VAC-50/60 single phase; and 220/440 VAC-50/60 Hz three phase. Models are available for on/off modulating control.

Listed below are performance specifications for a limited sampling of LB-Series electric actuators. This product family is available with a such a variety of options and features that they can not be represented in this catalog. Options such as positioners, transmitters, special enclosure ratings, extra switches, or motor voltages are optionally available. Contact Apollo's Actuator Engineering Department for the proper actuator to fit non standard or unique requirements.

PART NUMBER MATRIX

3R	AD	M	05	B	X	F
PREFIX	TYPE	MODULATION	TIME (S)	VOLTAGE	OPTIONS	DRIVE
3R	AC – OA6	M - MODULATING	05 - 5 SECONDS	A - 1/60/115 VAC	CONTROL SWITCHES*	F - FEMALE
	AD - OA8	BLANK - NONMODULATING	25 - 25 SECONDS	B - 1/60/220 VAC	H - HEATER	M - MALE
	AE - OA15		50 - 50 SECONDS	C - 3/60/460 VAC	P - POTENTOMETER	
	AF - AT18			D - 3/60/600 VAC	MS - POSIGAM+	
	AG - AT25			E - 3/60/230 VAC		
	AH - AT50			G - 1/50/220 VAC		
	AJ - BT50			H – 3/50/380 VAC		
	AK - BT100			I - 3/50/400 VAC		
				J - 1/50/115 VAC		
				K - 24 VDC		

*Consult factory for any additional options or variations not shown here

LB SERIES ELECTRIC ACTUATOR PERFORMANCE DATA

L-B SERIES MODEL NUMBER	TORQUE OUTPUT LB-IN	ROTATING SPEED (SEC/90 DEGREE)		POWER REQUIREMENTS 30% DUTY CYCLE			
				115VAC 1 PH 60HZ		460 VAC 3 PH 60 HZ	
		STD	OPT	RATED	START	RATED	START
OA8	885	5		1.95	3.3	0.63	1.15
OA8	885	25		1.25	2	0.39	0.78
OA15	1350	15	25	1.95	3.3	0.39	0.78
AT25	2250	15		1.95	3.3	0.63	1.15
AT25	2250	25	50	1.95	3.3	0.39	0.78
AT50	4500	25		4.6	12	0.63	1.15
AT100	8850	24	12	4	17	0.6	1.2

Contact factory for part numbers of actuators with options & other voltages

Notes:

- Operating speed is based on an actuator operating at rated output torque. Actual operating speed will vary depending on actual output torque.
- All torque and speed ratings are based on a plus or minus 10% motor voltage variation.
- All torque ratings represent the maximum torque available during both breakaway (start) and run (dynamic) conditions.
- Each actuator is supplied, as standard, with a 30% duty cycle, F insulation, TENV design motor rated for 360 starts per hour at 104˚F.
- All actuators are NEMA 4 rated as standard. Many are optionally available with additional ratings, such as, explosion proof or submersible, etc., to meet special service requirements.
- All actuators utilize a self-locking gear train design and have provision for manual override.
- All actuators have both electrical and mechanical travel stop provisions.
- FQ Series are Spring Return Failsafe models. Contact factory for model number and price (not listed above).

LB SERIES

DIMENSIONS

TYPES AO8 AND OA15

Standard specification: Weatherproof NEMA 4, with two adjustable SPDT limit switches; with built-in motor thermal cutouts, with handwheel for manual operation. Duty rating 30%.

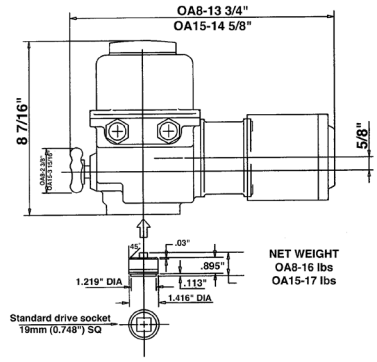

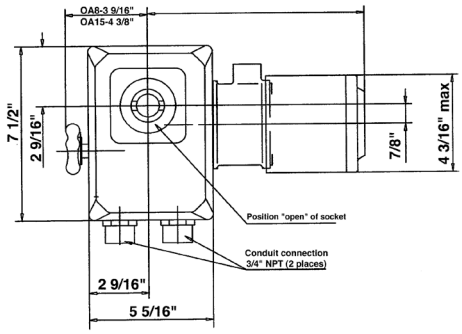

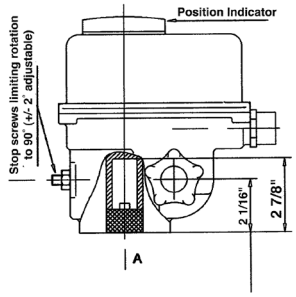

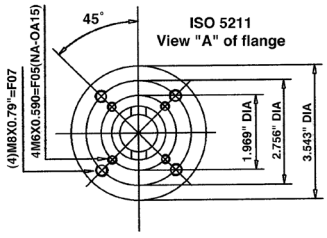

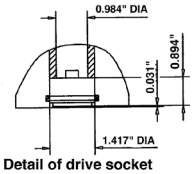

Detail of drive socket

TYPES AT25 AND AT50

Standard specification: Weatherproof to NEMA 4, fitted with two adjustable SPDT travel limit switches (one for each extreme position); two SPDT torque limit switches (one for each direction of rotation) and with handwheel for manual operation.

Duty rating 30%. Net weight: 40 lb.
AT25 female socket dimension = .866 square
AT50 female socket dimension = 1.063 square

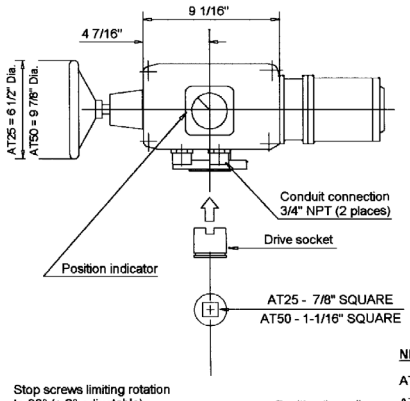

NET WEIGHT
AT25 - 35 lbs
AT50 - 40 lbs

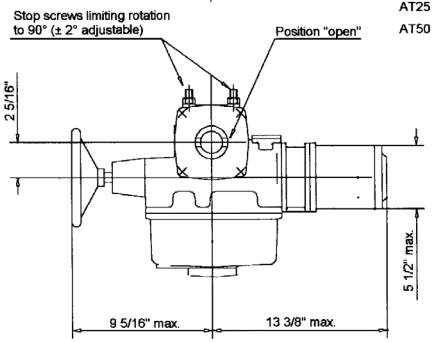

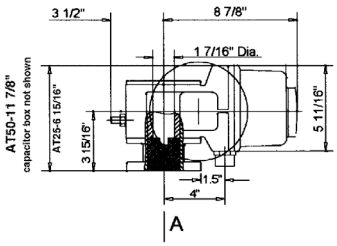

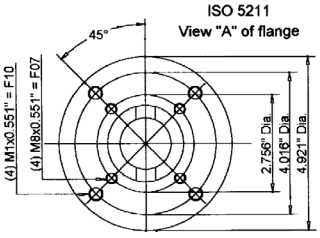

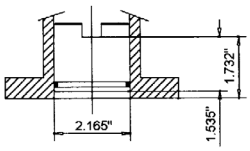

Detail of mounting socket

TYPE AT100

Standard specification: Weatherproof to NEMA 4, fitted with two adjustable SPDT travel limit switches (one for each extreme position); two SPDT torque limit switches (one for each direction of rotation) and with handwheel for manual operation. Duty rating 30%.

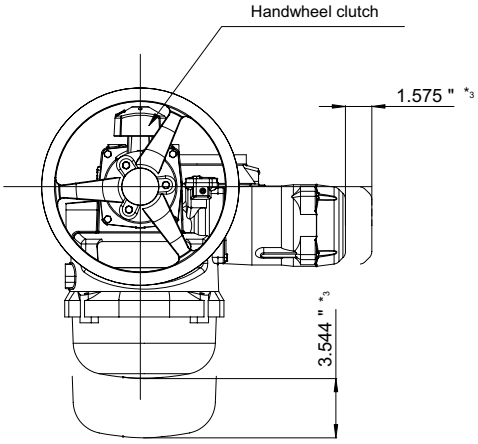

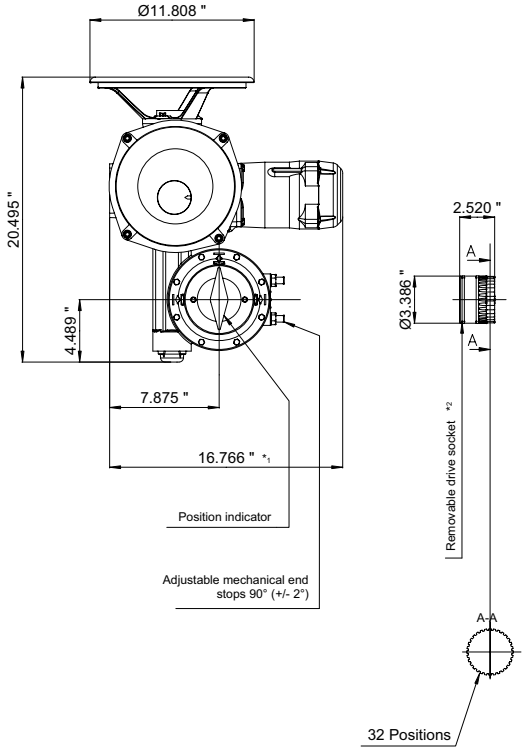

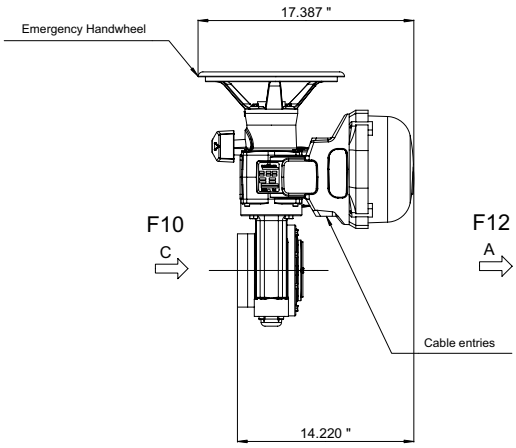

ISO 5211
F10
View C of the flange

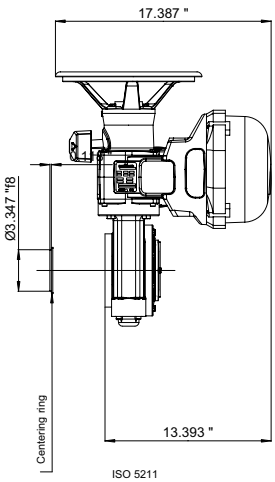

ISO 5211
F12
View A of the flange

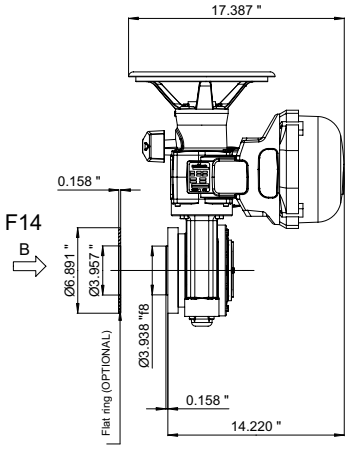

ISO 5211
F14
View B of the flange

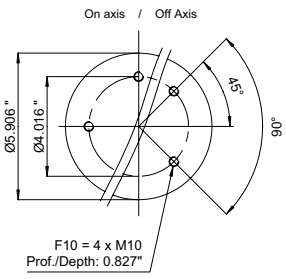

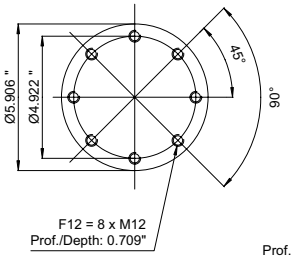

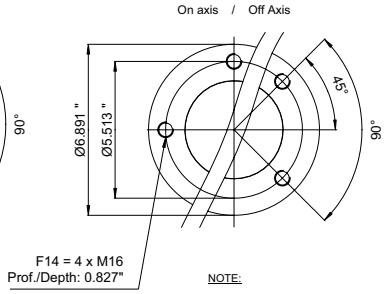

NOTE:

*1 The actuator is represented in its maximum size.

*2 Representation of the socket in closed position.

*3 Dimension to allow for dissassembly

DIRECT MOUNTED NAMUR SOLENOID VALVES

TEMPERATURE LIMITS:
- Media: 0°F to +180°F.
- Ambient:
  NEMA 4, 4X, 0°F to +180°F.
  NEMA 4-4X-7-9, 0°F to +125°F.

COIL RATINGS:
- NEMA 4, 4X: Continuous duty molded Class H insulation.
- NEMA 4-4X-7-9: Continuous duty molded Class F

COIL VOLTAGES AVAILABLE:
- Coil Voltage Variation: +/-10% of Nominal
  120 VAC-60 Hz/110 VAC-50 Hz.
  240 VAC-60 Hz/220 VAC-50 Hz/120 VDC.
  48 VAC-60 Hz/44 VAC-50 Hz/24 VDC.
  24 VAC-60 Hz/22 VAC-50 Hz/12 VDC.

POWER CONSUMPTION:
- 6 Watts

MATERIALS:
- Valve Body=Aluminum, anodized.
- Fasteners=Stainless Steel
- Seals & O-Rings=Nitrile.

CV FLOW RATE:
- 1.8

NEMA 4-4X UL, CSA, PTB&CE

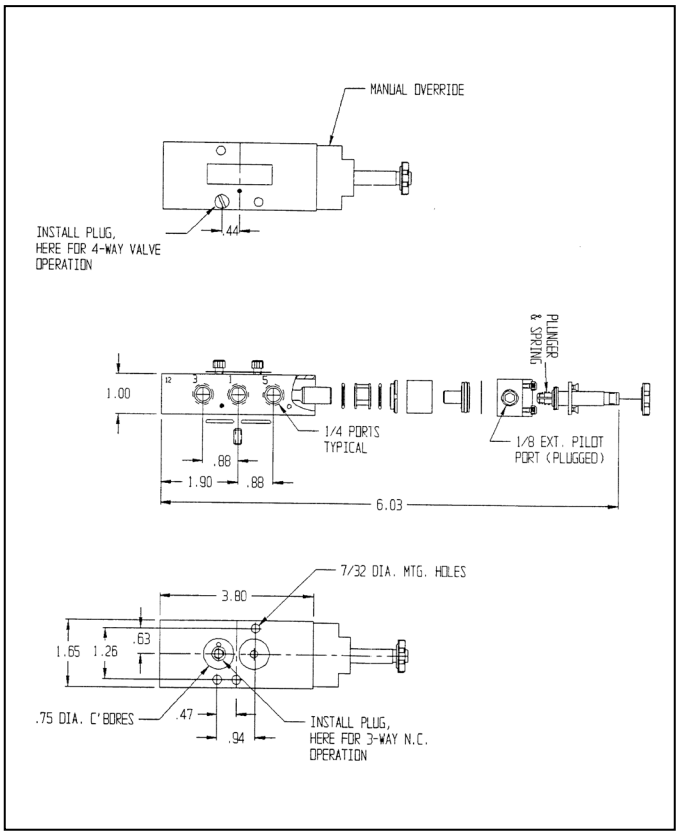

NEMA 4, 4X, 7 & 9 UL, CSA, PTB&CE

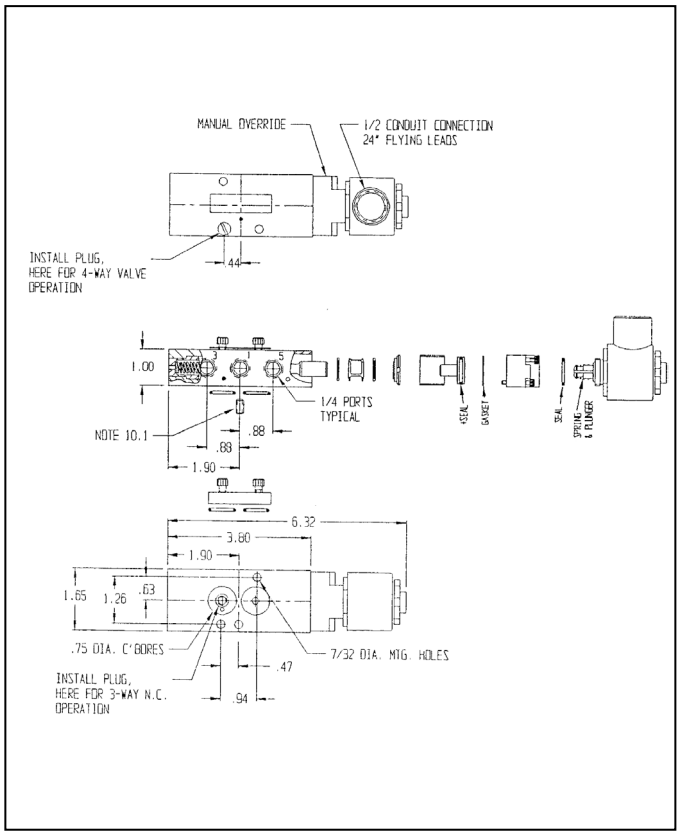

NAMUR SOLENOID VALVE WITH TRANSITION PLATE

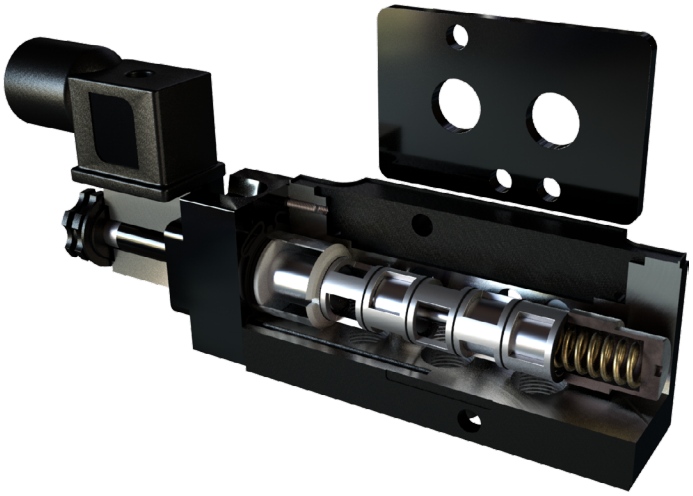

SOLENOID VALVES

AVC NAMUR *Three & Four-way, end mounted coil
Solenoids: Cv=1.8
For NAMUR Direct Mount

PART NO.		
3T8-411-40A	115 VAC NEMA 4	0025 thru 4000
3T8-421-40A	12 VDC/24 VAC NEMA4	0025 thru 4000
3T8-431-40A	24 VDC/48 VAC NEMA4	0025 thru 4000
3T8-441-40A	220 VAC NEMA4	0025 thru 4000
3T8-711-40A	115 VAC NEMA7	0025 thru 4000
3T8-721-40A	12 VDC/24 VAC NEMA7	0025 thru 4000
3T8-731-40A	24 VDC/48 VAC NEMA7	0025 thru 4000
3T8-741-40A	220 VAC NEMA7	0025 thru 4000

All above include adapters to turn "NAMUR 90°"

PART NO.		
3T8-000-32A	Adapter	0025-4000

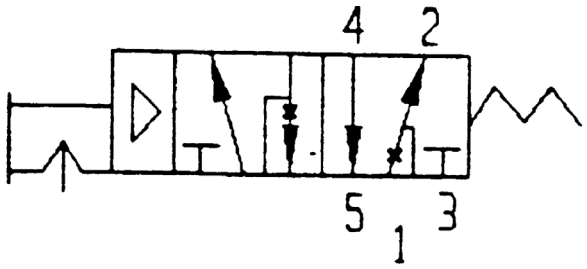

3-WAY N.C.

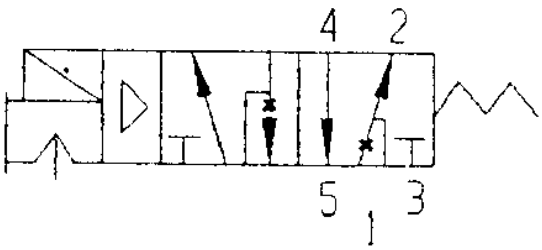

3-WAY N.C.

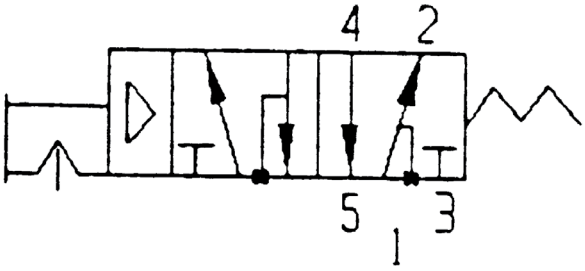

4-WAY OPERATION

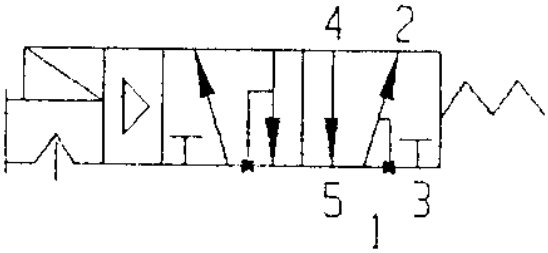

4-WAY OPERATION

LIMIT SWITCHES

STONEL QUARTZ & MONITEUR

The Quartz is available in explosion proof (QX), nonincendive and intrinsically safe (QN) and general purpose (QG) versions. The robust epoxy coated anodized aluminum construction makes this platform extremely durable and well suited for use in corrosive, heavy wash down environments. A broad range of switching, position transmitter and communication options may be selected to accommodate most applications.

This versatile platform adapts to a wide variety of valve systems. Attach the Quartz to quarter-turn actuators, manual operators, linear operators and positioners using readily available stainless steel mounting systems.

ENCLOSURES OPTIMIZED FOR ENVIRONMENT

- QX: Explosion proof, water tight and corrosion-proof enclosure is approved for use in div. 1/zone 1 hazardours areas.
- QN: Nonincendive is approved for all div.2/zone 2 hazardous environments with proximity sensors using a clear cover. Intrinsically safe Namur sensors or passive switches are available for div. 1/zone 0 applications.
- QG: General purpose features a clear Lexan cover with mechanical switches. All enclosures are rated NEMA 4, 4x, and 6.

RAPID ENCLOSURE ACCESS

- Screw-on cover allows quick enclosure access, saving you valuable
- maintenance and set-up time. The cover provides a vapor tight seal and allows entry to internal components in less than five seconds.

FASTER WIRING

- Pre-wired and labeled terminal strip enables quick, convenient attachment of field wires.

WIDE VARIETY OF SWITCHING & COMMUNICATION

- Switching options include dual module sensors and communication, Maxx-Guard proximity switches and mechanical switches. Continuous signal output is available in a 4 to 20 mA position transmitter.

QUICK SET CAMS ARE EASY TO ADJUST

- Touch and Tune switch settings allow you to make adjustments in seconds without the use of tools.

DUAL SHAFT O-RING SEALS ELIMINATE CORROSION

- Top inner and bottom outer shaft o-rings seal the drive bushing from both external corrosives and internal contaminants that enter the enclosure.

SPECIAL DRIVE BUSHING ASSURES LONG CYCLE LIFE

- The oil impregnated bronze bushing maintains smooth operation and eliminates the potential for shaft seizure due to actuator shaft eccentricity.

SPACE SAVING VISUAL INDICATION

- Visual indicator offers excellent view ability without sacrificing accessibility or adding to space requirements. Indicators are also available with continuous percentage or three-way indication.

See Page R-42 for Part Numbering Matrix

Moniteur Limit Switches have been designed to provide the most visible and reliable valve position indication in general purpose, difficult process, and explosion-proof environments. With a wide variety of switches and sensors available to match your application.

FEATURES

- The industry's only "true" visual valve position indicator available for multi-port valves, adjustable to match the actual physical flow pattern of the valve.
- Patented engineered Loc-Ring Cam and Shaft Retention System provides unsurpassed sensing accuracy over the multi-million cycle life of the physical platform.
- Clear Ektar cover offers optimum chemical resistance and strength and is environmentally sealed to prevent fogging and entry of contaminants.
- Indicator is fully adjustable to any valve or actuator.
- Internal switches and terminal block are labeled for easier installation.
- Careful material selection provides a rated life of minimum 1,000,000 cycles.
- Materials of construction selected to excel in high vibration, corrosive, and dirty environments, either indoors or outdoors.
- "Flat cover" version is available without an indicator for areas with tight space requirements.

PART NO.	MODEL NO.	DESCRIPTION
3T-LS3-02	FMYB-5120	NEMA 4/Indicator/2 SPDT Mech.
3T-LS3-06	FFNB-5120	NEMA 4/Flat Cover/2 SPDT Mech.
3T-LS3-01	AMYB-5120	NEMA 7/Indicator/2 SPDT Mech.
3T-LS3-05	AFNB-5120	NEMA 7/Flat Cover/2 SPDT Mech.
3T-LS3-03	AMYB-5220	NEMA 7/Indicator/2 SPDT Prox.
3T-LS3-07	AFNB-5220	NEMA 7/Flat Cover/2 SPDT Prox.
3T-LS3-04	FMYB-5220	NEMA 4/Indicator/2 SPDT Prox.

Part No.	Actuator Size
63-002-12	0012
63-002-13	0025-0350
63-002-14	0600-4000

*Short shaft NAMUR must use kits above.

LIMIT SWITCHES

HOW TO ORDER - STONEL QUARTZ

Explosion proof Quartz Models (Aluminum Cover)

Series	Sensors/Switches			
QX	Sensor Modules			
	33	SST N.O. Switching Sensor Dual Module		
	Valve Communication Terminals (VCTs)			
	92	DeviceNet VCT		
	93	Foundation Fieldbus		
	96	AS-Interface		
	97	AS-Interface (w/ extended addressing)		
	Mechanical Switches			
	2V	(2) SPDT Mechanical Switches		
	2W	(2) SPDT Gold Contact Mechanical Switches		
	4V	(4) SPDT Mechanical Switches		
	4W	(4) SPDT Gold Contact Mechanical Switches		
	14	(2) DPDT Mechanical Switches		
	5V	Position Transmitter w/ (2) SPDT Mechanical Switches		
	5W	Position Transmitter w/ (2) SPDT Mechanical Switches		
	Expeditors (Proximity Type)			
	82	DeviceNet		
	86	AS-Interface		
	Sensors/Switches			
	Function		Switch/Sensor Type	
	2	(2) Switches	P	SPST Maxx-Guard
	4	(4) Switches	L	SPST Maxx-Guard (LED)
	5	Position Transmitter w/ (2) or No Switches	G	SPDT Maxx-Guard
	7	High Performance Position Transmitter w/ (2) or No Switches	H	SPDT Maxx-Guard
	8	Expeditor, Y or H switches only	S	SPDT Maxx-Guard (LED)
			Y	Expeditor Only (3)
			F	PNP Solid State 3-Wire P&F
			X	SST Sensor (LED)
			O	No Switches

Enclosure		Conduit Entries		Indicator	
E	North American (NEC/CEC)	02	(1) 3/4" NPT &	SRA	Red-Closed / Green-Open
R	International (IEC/ATEX)		(1) 1/2" NPT	SGA	Green-Closed / Red-Open
F	INMETRO	03	(1) 3/4" NPT &	S1A	T1 3-way
S*	Stainless Steel North American (NEC/CEC)		(2) 1/2" NPT	S2A	T2 3-way
T*	Stainless Steel International (IEC/ATEX)	05	(2) M20	S3A	T3 3-way
M*	Stainless Steel INMETRO			S4A	T4 3-way
		06	(3) M20	S5A	T5 3-Way
				S0A	No Indication
				SXA	Special
				SCA	Continuous

* Available w/ 03 or 06 conduit entry only

Nonincendive & Intrinsically Safe Quartz Models (Clear Cover)

Series	Sensors/Switches			
QN	Sensor Modules			
	33	SST N.O. Switching Sensor Dual Module		
	44	Namur Sensors Dual Module I.S.; DIN 19234		
	Valve Communication Terminals (VCTs)			
	92	DeviceNet VCT		
	93	Foundation Fieldbus		
	96	AS-Interface		
	97	AS-Interface (w/ extended addressing)		
	Expeditors (Proximity Type)			
	82	DeviceNet		
	86	AS-Interface		
	Sensors/Switches			
	Function		Switch/Sensor Type	
	2	(2) Switches	P	SPST Maxx-Guard
	4	(4) Switches	L	SPST Maxx-Guard (LED)
	5	Position Transmitter w/ (2) or No Switches	G	SPDT Maxx-Guard
	7	High Performance Position Transmitter w/ (2) or No Switches	H	SPDT Maxx-Guard
	8	Expeditor, Y or H switches only	S	SPDT Maxx-Guard (LED)
			Y	Expeditor Only (3)
			F	PNP Solid State 3-Wire P&F
			X	SST Sensor (LED)
			O	No Switches
			Intrinsically Safe Type	
			J	SPST (Passive)
			M	SPDT (Passive)
			N	P + F Namur Sensors

Enclosure		Conduit Entries		Indicator	
C	North American (NEC/CEC)	02	(1) 3/4" NPT &	SRA	Red-Closed / Green-Open
D	International (IEC/ATEX)		(1) 1/2" NPT	SGA	Green-Closed / Red-Open
		03	(1) 3/4" NPT &	S1A	T1 3-way
			(2) 1/2" NPT	S2A	T2 3-way
		05	(2) M20	S3A	T3 3-way
				S4A	T4 3-way
		06	(3) M20	S5A	T5 3-Way
				S0A	No Indication
				SXA	Special
				SCA	Continuous

General Purpose Quartz Models (Clear Cover)

Series	Function			
QG	Mechanical Switches			
	2V	(2) SPDT Mechanical Switches		
	2W	(2) SPDT Gold Contact Mechanical Switches		
	4V	(4) SPDT Mechanical Switches		
	4W	(4) SPDT Gold Contact Mechanical Switches		
	14	(2) DPDT Mechanical Switches		

Enclosure		Conduit Entries		Indicator	
C	General Purpose	02	(1) 3/4" NPT &	SRA	Red-Closed / Green-Open
			(1) 1/2" NPT	SGA	Green-Closed / Red-Open
		03	(1) 3/4" NPT &	S1A	T1 3-way
			(2) 1/2" NPT	S2A	T2 3-way
		05	(2) M20	S3A	T3 3-way
				S4A	T4 3-way
		06	(3) M20	S5A	T5 3-Way
				S0A	No Indication
				SXA	Special
				SCA	Continuous

POSITIONERS

VRC

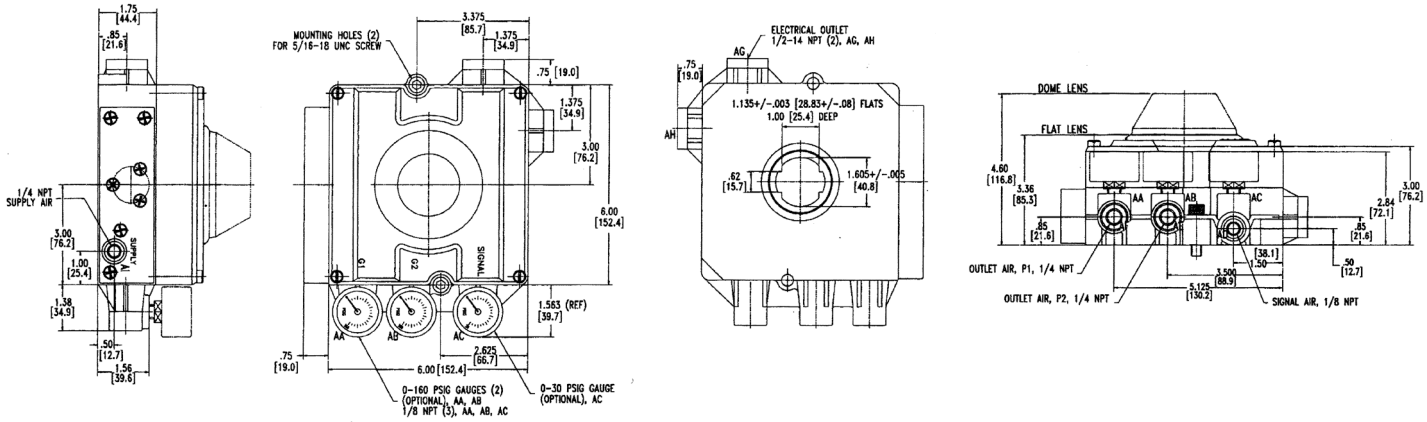

STANDARD MATERIALS LIST

PART	MATERIALS
Enclosure	PPA Composite, 300 Stainless Steel Port Rings, Cover and Mounting Bolts
Indicator Lens	LEXAN™
Internals	PPA, PPS and PEEK Composites 300 Series Stainless Steel
Nickel Plated Brass Spool Valve	Carpenter 70 Grade Stainless Steel
I/P Converter (VK02) VE Model	PPA Composite, TEFLON™ Coated Carbon Steel, Nickel Plated Carbon Steel, High Density Polyethylene DELRIN™
Signal Diaphragm/ O-Rings	BUNA N

PERFORMANCE

PARAMETER	SPECIFICATION
Resolution	1.25% Maximum 0.10% Typical
Repeatability	99.75% Minimum 99.90% Typical
Hysteresis	0.50% Maximum 0.25% Typical
Linearity	1.0% Maximum
Gain @80 psig	250 Single Acting 500 Double Acting
Air Consumption @80 psig	0.25 SCFM – Standard Flow Spool Valve 0.45 SCFM – Maximum Flow Spool Valve
Temp. Range	-40 to 150˚F/-40 to 65˚C

HOW TO ORDER VRC POSITIONERS

PART NUMBER MATRIX

3PV -	0	7	3	0	0
PREFIX	POSITION INDICATOR & TYPE	SPOOL VALVE	PORT GAUGES	POSITION TRANSMITTER	LIMIT SWITCH
3PV	0 - FLAT PNEUMATIC	7 - STANDARD FLOW	3 - NO GAUGES	0 - NO TRANSMITTER	0 - NO SWITCH
	1 - FLAT ELECTRO-PNEUMATIC	8 - MAX FLOW	4 - BRASS GAUGES	F - 4-20MA CURRENT	K - MECHANICAL SWITCH
	5 - DOME PNEUMATIC		5 - SS GAUGES	OUTPUT 2-WIRE	M - PROXIMITY SWITCH
	6 - DOME ELECTRO-PNEUMATIC				

POSITIONERS

PMV

Simple design makes this product easy to understand, calibrate and repair. Rugged construction provides operation in a variety of tough applications. Compact size minimizes space requirements. A complete package means the user can select the right positioner for his application.

A bright indicator makes it easy for operators to visually check valve position. Spool valve design requires very little maintenance. Electro-pneumatic unit eliminates the need for an extra product and additional connections. Recognized product name means a proven product with many years of service.

Valve positioners are an excellent tool for increasing the gain of your valve package, often reducing your actuator size due to your increased ability to accurately control higher air deliveries, and the flexibility to add options and accessories to complete your control package's performance.

Our standard positioners include both pneumatic and electropneumatic positioners. Electropneumatic Positioners may be used on either double acting or spring return actuators. The anodized aluminum housing provides excellent product integrity and good corrosion resistance. Options including special coatings, stainless steel housings, and a variety of accessory items which provide the flexibility to meet your most demanding control applications.

PART NUMBERS

APOLLO PART #'S	PMV MODEL #'S	DESCRIPTION
3T-200-01	P-2000	Double Acting, Electro-Pneumatic, 1
3T-202-01	P-2020	Double Acting, Electro-Pneumatic, 2
3T-500-01	P5	Double Acting, Hi Capacity & Gain
3T-250-01	EP5	Electro Pneumatic, Hi Capacity & Gain
3T-250-02	EP5-EX	Double Acting, Hi Capacity & Gain, Explosion Proof

1. Normal Capacity
2. High Capacity
3. ccessories such as pressure gauges, limit switches, transmitters, and potentiometers are available. Please consult the factory for pricing.

PMV MOUNTING KITS FOR APOLLO ACTUATORS

ACTUATOR SIZE	MOUNTING KIT	MATERIAL
AD/AS 0012	63-002-01	Stainless Steel
AD/AS 0025-0350	63-001-89	Stainless Steel
AD/AS 0600-4000	63-001-91	Stainless Steel

PRODUCT SPECIFICATIONS

	P2000/20	P5/EP5*
Connections:	1/4"	1/4"
Supply Pressure:	120 psig	145 psig
Hysteresis:	0.5%	0.5%
Linearity:	2.0%	0.5%
Repeatability:	0.5%	0.5%
Sensitivity:	0.5%	0.25%
Input Signal:	4-20 mA	3-15, 4-20mA
Temperature - Standard:	+5 - 175˚F	+5 - 185˚F
Temperature - Optional:	+5 - 230˚F	+5 - 230˚F
Weight:	5.9 lbs.	2.9/4.1 lbs.
Air Consumption @ 85 psig:	35/.71 scfm----------.75 scfm	
Air Delivery @ 57 psig:	12/15.7 scfm	12.6 scfm
Gain Factor:	50/400	10,000

*PMV New Modular Unit P5-Pneumatic; EP5 Electropneumatic

POSITION MONITORING SYSTEMS

PROXIMITY VALVE POSITION

VALVE POSITION MONITORING SYSTEMS

Proximity Controls' flexible Valve Position Monitoring Systems give users the ability to reliably monitor both manual and actuated valves. The durable position monitoring system features mounting hardware available in zinc plated steel, stainless steel, and Namur standards for all Proximity indicator models.

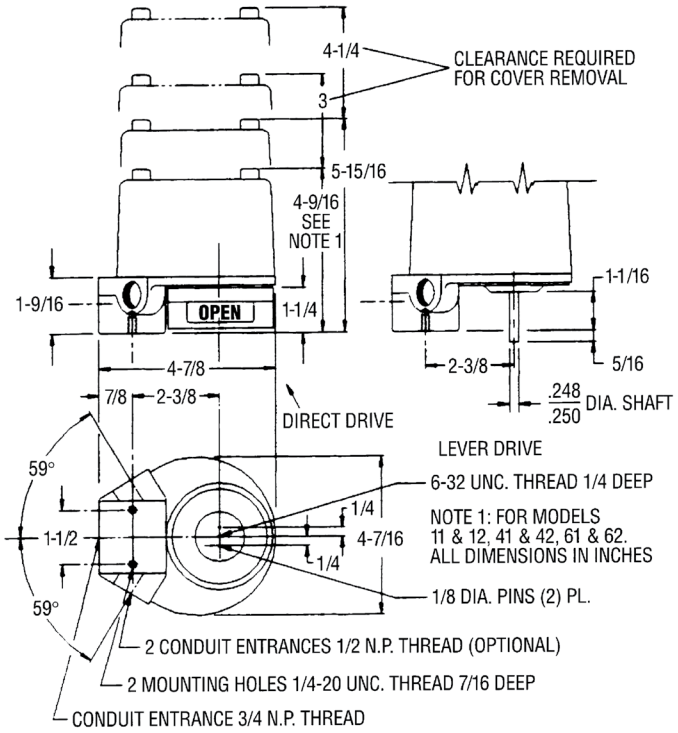

PROXIMITY MODEL #	NEMA	MODEL DESCRIPTION	SWITCH/TRANSMITTER SPECIFICATIONS
42ADM	4,4X	2 SPDT MECH, Clear Plastic Cover	15 amps ac, 5 amps dc
42AD0	4,4X,7,9	2 SPDT MECH, Anodized Aluminum Housing	15 amps ac, 5 amps dc
42DD0	4,4X,7,9	2 DPDT MECH, Anodized Aluminum Housing	10 amps ac, 10 amps dc
42RD0	4,4X,7,9	2 SPDT PROX, Herm Sealed Reed, Anodized Al.	3 amps ac, 2 amps dc
42VD0J1	4,4X,7,9	2 SPDT MECH, 3/4" & 1/2" NPT Entry, Anodized Al.	10 amps ac, 10 amps dc
42RD0J1	4,4X,7,9	2 SPDT PROX, 3/4" & 1/2" NPT Entry, Anodized Al.	3 amps ac, 2 amps dc
44AD0	4,4X,7,9	4 SPDT MECH, Anodized Aluminum Housing	15 amps ac, 5 amps dc
45VD0	4,4X,7,9	2 SPDT MECH, & Transmitter, Anodized Aluminum	10 amps / 4-20 mA out
45RD0	4,4X,7,9	2 SPDT PROX, & Transmitter, Anodized Aluminum	3 amps / 4-20 mA out
62PD0	4,4X,7,9	2 SPST PROX, Anodized Aluminum Housing	Herm Sealed Reed (mA)
62QD0	4,4X,7,9	2 SPDT PROX, Anodized Aluminum Housing	Herm Sealed Reed (mA)
35OD0*	Mag Coupling	MULTI-TURN Transmitter, Anodized Aluminum	No Switch / 4-20 mA
12AD0**	Mag Coupling	2 SPDT MECH, Anodized Aluminum Housing	15 amps ac, 5 amps dc
15VD0	Mag Coupling	2 SPDT MECH, & Transmitter, Anodized Aluminum	10 amps / 4-20 mA out
12VD0J1	Mag Coupling	2 SPDT MECH, 3/4" & 1/2" NPT Entry, Anodized Al.	10 amps ac, 10 amps dc
12AD6	Mag Coupling - ST STL	2 SPDT MECH, 304 Stainless Steel Housing	15 amps ac, 5 amps dc
15VD6	Mag Coupling - ST STL	2 SPDT MECH, & Transmitter, 304 Stainless Steel	10 amps / 4-20 mA out

*No Visual Indicator Mag (Magnetic) Coupling - Maximum hazard protection and submersible. Prox (Proximity) sensors are all Herm (Hermetically) Sealed Reeds. Anodized aluminum housing is standard. 316 Stainless Steel is optional.
** Apollo maintains the 12ADO in stock, Apollo part number with indicator M116100 and without indicator M105900.

When ordering, please specify requirements for explosion proof certifications (US, CSA OR CENELEC), or Intrinsic Safety. Standard temperature (180°F) switches are available. White epoxy is optional. When you need a junction package, specify your solenoid valve requirement(s). For factory sealed lead orders, please specify number of leads and desired length (36" standard). Let us know if you need special cables or connectors, and specify your mounting hardware requirements.

LOCKOUT DEVICE

OSHA

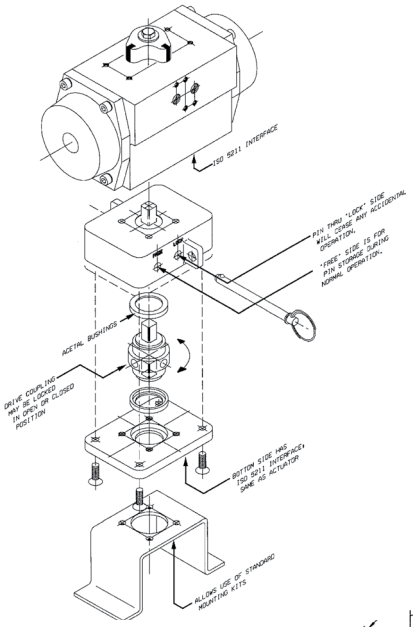

The Apollo Lockout Tagout accessory for actuators complies with OSHA 1910.147 guidelines. It insures complete lockout capability in both the fully open or the fully closed position. Its design prevents accidental or malicious tampering of an automated valve's orientation.

The housing is constructed in investment cast 316SS, the fasteners, the lock pin, and the coupling are made of 300 Series stainless steel. This rugged construction, plus two acetal bushings located above and below the coupling, assures the strength and support necessary to withstand the torque and torsion generated by the actuator mounted above.

The top and bottom of the housing feature ISO 5211 mounting patterns. This design allows the accessory to be fitted between existing actuators and stainless steel bracketry that also comply with the ISO 5211 standard.

Available in six sizes, it is the perfect compliment to the Apollo Rack and Pinion Actuator and Apollo Ball Valve. The design results in a safe automated package that will satisfy the concerns of the most discriminating safety engineer.

The lockout device may be used with electric actuators. However, caution should be exercised due to the possibility of motor burnout in an energized and locked position.

DIMENSIONS

DIMENSION	3TL3000	3TL4000	3TL5060	3TL6570	3TL8000	3TL9000
A	4.00	4.00	6.00	6.00	8.00	8.00
B	3.00	3.00	4.25	4.25	6.00	6.00
C	2.25	2.25	3.12	3.12	4.25	4.25
D	1.75	1.75	2.37	2.37	3.50	3.50
E	0.06	0.06	0.10	0.10	0.18	0.18
F	2.00	2.00	3.00	3.00	4.00	4.00
G	0.50	0.70	0.87	0.87	1.38	1.38
H	1.02	1.02	1.75	1.75	2.50	2.50
I	0.62	0.70	1.17	1.17	2.00	2.00
J(RAD.)	0.37	0.37	0.50	0.50	0.75	0.75
K	0.96	0.96	1.50	1.50	2.50	2.50
L1	0.265	0.265	0.328	0.328	0.515	0.640
L2	NA	NA	0.390	0.390	NA	NA
UNC1	1/4-2OUNC	1/4-2OUNC	5/16-18UNC	5/16-18UNC	1/2-2OUNC	5/8-11UNC
UNC2	NA	NA	0.390	0.390	NA	NA
M1 B.C.	1.970 (F05)	1.970 (F05)	2.756 (F07)*	2.756 (F07)	4.920 (F12)	5.510 (F14)
M2 B.C.	NA	NA	4.016 (F10)	4.016 (F10)*	NA	NA
XT (MAX.)	0.540	0.690	0.955	1.080	1.325	1.780
XB (MIN.)	0.551	0.710	0.985	1.105	1.420	1.890
CT	.430/.432	.547/.550	.744/.747	.862/.865	1.056/1.059	1.413/1.416
CB	.433/.435	.551/.553	.748/.750	.866/.868	1.060/1.063	1.419/1.422
WEIGHT	3.65	3.75	9.90	10.40	28.90	29.50

*F Patterns Designated are Standard Mounting Arrangement

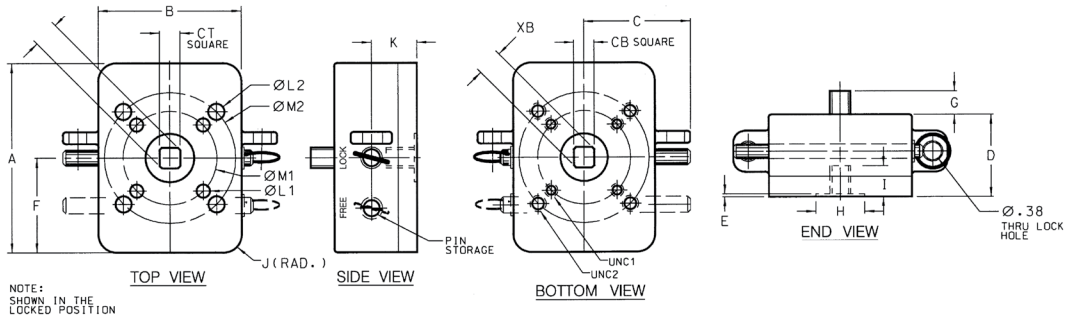

BALL VALVES

GENERAL ACTUATION INFORMATION

VALVE MOUNTING

Mounting of Apollo actuators to quarter turn valves is a straight forward task. Conbraco provides stainless steel brackets and couplings that are precision made to fit each of its Apollo valve and actuator combinations. The simplicity of valve mounting hardware is deceptive and may cause carelessness in the assembly operation.

CAUTION

It is mandatory that the actuator to valve mounting procedure be performed by personnel that have been properly trained and informed of the importance of this assembly operation.

Apollo's brackets and couplings have been engineered to have the required strength and precision fit to insure reliable valve operation. Each mounting kit has all the required components to mate specific valves and actuators (refer to the mounting kit selection guide).

CAUTION

Brackets and couplings of lesser quality can expose the stem of the valve to side loads that will ultimately cause premature stem leakage. It is essential that the actuator to valve mounting be treated as a critical assembly operation. All brackets and couplings must be properly aligned prior to tightening the attachment bolts. The assembly should undergo an operational test to insure that there is no binding during operation. There must be no discernible flexing of the bracket. If either is noted corrective action must be taken before the assembly is considered acceptable for use.

ALL AUTOMATED VALVES must undergo an operational test to insure that both the valve and actuator function properly. The valve must be properly aligned in both the open and closed positions. Spring return actuators must perform their intended safety function such as: fail closed, fail open. Modulating actuators should operate the valve in the correct direction in response to the required instrument signal.

BALL VALVE TORQUE

Before an actuator can be selected, the in-service torque requirement of the valve must be determined. The in-service valve torque is influenced by many factors. Packing and seating materials are fundamental to the construction of the valve and therefore establish the basic required torque. Service conditions which include differential pressure, frequency of operation and flow media also have a significant effect on the valve's in-service torque. Refer to the Torque Constants Chart for valve torque requirements under defined conditions. The torque required to operate a ball valve is the result of friction between the moving and stationary components of the valve. The stem to packing friction and the ball to seat friction combine to establish the minimum torque requirement. Conbraco recommends the use of a stainless steel ball and stem on automated valves.

LONG STAND STILL TORQUE (LSST)

Common to soft seated ball valves is the phenomena of Long Stand Still Torque (LSST). For floating ball valves, LSST is typically twice the normal rated torque. The phenomena occurs when a valve remains idle for an extended period of time, typically a month or more, but the time period can vary by application. Even if "normal" operation is daily or even more frequent, if the valve sits idle LSST still need to be taken into account when sizing an actuator. Once the valve has been operated a couple of times, the operating torque returns to normal levels.

BALL & SEAT

Valve torque is primarily dependent on the friction between the moving ball and the stationary seat. Seating material and surface finish of the ball establish the basic frictional characteristics of the combination. Service conditions also play a major roll in modifying the effects of friction. A floating ball valve utilizes the difference between the upstream and downstream pressures to force the ball into the downstream seat. When this force exceeds the forces in the original assembly, the torque required to rotate the ball increases. Process media may also increase or decrease the friction between the ball and seat. To insure reliable actuator selection, the service conditions of the installed valve must be carefully determined and considered for their effect on torque.

STEM & PACKING

Stem torque is primarily dependent on the frictional characteristics of the packing material and the tightness of the packing adjustment. Proper adjustment of the packing is important not only to the leak tight performance of the valve but also minimizes the operating torque. Tightening the packing more than is required to establish a proper seal, only increases torque requirements and stem wear. Packing adjustment can be abused to the point that a properly selected actuator may not be able to operate the valve. Stem packing friction is essentially unaffected by the media and operating pressures within the valve.

-24/-29 GRAPHITE STEM PACKING ADDER

The selection of graphite packing contributes significantly to the operating torque of a valve. The friction factor for graphite is a magnitude different than that of PTFE based packings. The contribution to torque is a function of the stem diameter and is reflected in each of the following tables. When selecting either the -24, -29 or -65 options use the appropriate adder listed in the table for each valve as a direct increase to the base torque constant.

BREAKWAY TORQUE

Torque required to initiate the opening of a valve from the fully closed position. This is the highest torque requirement anywhere within the Apollo Ball Valve's rotation. The Torque Constants Chart lists breakaway torques for Apollo valves under defined operation conditions.
Note: For double acting actuators, the torque output at the given air supply pressure must exceed the breakaway torque of the valve.

CLOSING TORQUE

Torque required to rotate the valve from the open position, into the fully closed position. A conservative approach is taken when determining closing torque because operating conditions have a significant effect on its value. It is safest to assume that closing torque is equal to breakaway torque. In actual service conditions the closing torque may be less, but this margin is used as a sizing safety factor.

GUIDELINES FOR DETERMINING IN-SERVICE VALVE TORQUE

Actual service conditions must be considered when determining a valve's required torque. Torque Adjustment Factors have been established to convert the Torque Constant value to an in-service torque. Multiple Torque Adjustment Factors may be required to establish the proper in-service torque requirement. All valve torque determinations begin with the Torque Constant value at the appropriate differential pressure. Adjustment factors must be used to determine the in-service valve torque requirement (see page 52, Torque Adjustment Factors Chart). Each applicable adjustment factor is applied to the value from the Torque Constants chart. The sum of all appropriate adjustments of the valve's torque are added to the original value from the Torque Constants chart. The result is the in-service torque requirement. This torque value is to be used in actuator selection.

Note: For fail closed applications, the closing torque must be exceeded by the "spring end" force of the actuator. For fail open applications, the closing torque must be exceeded by the "air end" (at the given supply pressure) force of the actuator.

BALL VALVES

TORQUE CONSTANTS

TORQUE CONSTANTS FOR APOLLO END ENTRY VALVE (1), (2)

TORQUE CONSTANT (IN-LB) AT DIFFERENTIAL PRESSURE INDICATED (PSIG)									
DIFFERENTIAL PRESSURE (PSIG)		200	400	600	800	1000	1500	LSST***	-24 ADDER
VALVE MODEL	SIZE							(IN.-LB)	(IN.-LB)
STANDARD PORT 70-64x 71-14x 76-10x 76-60x 89-14x 399-10x	1/4 - 1/2	35	35	40	43	46	48	70	45
	3/4	50	50	54	59	62	64	100	45
	1	101	101	103	106	116	130	202	56
	1-1/4	171	171	205	216	246	286	342	96
	1-1/2	192	192	216	265	280	311	384	96
	2	271	271	276	300	309	354	542	96
	2-1/2 & 3	540	700	820	920	1030		1000	96
FULL PORT BRONZE 77-14x 77-60x	1/4 - 1/2	35	35	40				70	45
	3/4	74	74	84				148	56
	1	234	234	250				468	56
	1-1/4	286	286	321				552	56
	1-1/2	357	357	398				714	96
	2	650	650	722				1300	96
	2-1/2 & 3	715	715	790				1430	111
FULL PORT BRONZE 77D-14X	1/2	25	25	25	25			50	
	3/4	55	55	55	55			110	
	1	87	87	87	87			174	
	1-1/2	120	120	120	120			240	
	2	280	280	280	280			560	
**STANDARD PORT **71-ARX-64 89-ARX-64 76-ARX-64	1/4 - 1/2	26	27	28	30	32	35	50	45
	3/4	50	52	54	57	60	64	100	45
	1	86	88	90	94	97	110	170	56
	1-1/4	140	145	156	160	172	194	280	96
	1-1/2	164	173	186	195	201	235	320	96
	2	230	258	270	310	350	460	440	96
	2-1/2	495	576	680	790	900		900	96
	3	540	700	820	920	1030		1000	96
*FULL PORT **77-ARX-64	1/4 - 1/2	50	52	54				100	45
	3/4	86	88	90				170	56
	1	148	160	180				280	56
	1-1/2	300	310	340				580	96
	2	355	420	563				680	96
FULL PORT 3-PIECE 82-14X & 24X	1/4 - 1/2	78	78	90				156	56
	3/4	156	156	178				312	56
	1	208	208	230				416	96
	1-1/4	234	234	276				468	96
	1-1/2	350	350	390				700	96
	2	715	715	755				1430	96
	3	710						1100	292
	4	1052						1540	292
Full Port 3-Piece 84A-14X & 24X 84B-14X & 24X 85A-10X & 20X 85B-10X & 20X	3/4	38	39	41	42	43	49	75	45
	1	61	62	63	63	67	79	121	68
	1-1/2	182	198	213	228	243	281	335	96
	2	182	198	213	228	243	281	335	96
	2-1/2	275	338	402	466	529	688	422	127
FULL PORT 3-PIECE 83A-14X & 24X 83B-14X & 24X 86A-10X & 20X 86B-10X & 20X	1/4 - 1/2	38	39	41	42	43	49	75	45
	3/4	61	62	63	63	67	79	121	68
	1	97	104	110	117	124	141	180	68
	1-1/4	182	198	213	228	243	281	335	96
	1-1/2	182	198	213	228	243	281	335	96
	2	275	388	402	466	529	688	422	127
FULL PORT 3-PIECE 83R-108-01 & 83R-100-01 86R-108-01 & 86R-100-01	2	715	715	755	800	912	1024	1430	96
	3	1030	1030	1087	1148	1212		2060	201

* Torques tested with multifilled seats. Does not require torque adjustment of -20%.
** 71-ARX-64 and 77-ARX-64 rated to 600 psig maximum.
*** LSST - Long Stand Still Torque

Note 1:
Constants are used to determine the in-service torque requirements of Apollo Valves.
Note 2:
Constants are based on RPTFE seats, and clean dry air at the stated differential pressure.

BALL VALVES

TORQUE CONSTANTS

TORQUE CONSTANTS FOR APOLLO PEEK SEATED 83B/86B WITH GRAPHITE STEM PACKING

TORQUE CONSTANT (IN-LB) AT DIFFERENTIAL PRESSURE (PSIG) INDICATED										
DIFFERENTIAL PRESSURE (PSIG):		200	400	600	800	1000	1200	1400	1500	LSST
VALVE MODEL	SIZE									(IN.-LB)
FULL PORT 3-PIECE 83B/86B	1/4 - 1/2	75	80	86	91	98	105	111	118	112
	3/4	130	150	170	177	185	194	204	210	195
	1	250	263	276	289	302	315	328	345	375
	1-1/4	420	463	506	549	592	635	678	720	630
	1-1/2	420	463	506	549	592	635	678	720	630
	2	840	922	1004	1086	1168	1250	1332	1410	1260

Caution: 2" PEEK seated valves operating at pressures higher than 1000 psig. should be automated or have a gear operator installed. Lever operation is not suggested. All values are stated in (in. lb.)

TORQUE CONSTANTS FOR APOLLO FLANGED BALL VALVES

VALVE SERIES	SIZE	WORKING PRESSURE (PSIG)									LSST	-24 ADDER	-EF ADDER
		0	100	200	300	400	500	600	700	740	(IN.-LB)	(IN.-LB)	(IN.-LB)
87A-100s 88A-140s 87B-100s 88B-100s	1-1/2" SP 150	132	144	155	167						264	68	68
	2" SP 150	176	193	211	228						352	96	96
	2-1/2" SP 150	231	254	277	300						462	127	127
	3" SP 150	253	327	402	476						506	127	127
	4" SP 150	850	860	875	890						1700	292	292
	6" SP 150	1325	1345	1370	1400						2650	292	292
	8" SP 150	2200	2494	2788	3081						4400	661	895
	10" SP 150	3300	3580	3860	4140						6600	661	895
87A-200s 88A-240s	1/2" FP 150	22	22	22	22						44	45	45
	3/4" FP 150	39	43	47	51						77	68	68
	1" FP 150	132	144	155	167						264	68	68
	1-1/2" FP 150	176	193	211	228						352	96	96
	2" FP 150	231	254	277	300						462	127	127
	2-1/2" FP 150	253	327	402	476						506	127	127
	3" FP 150	850	860	875	890						1700	292	292
	4" FP 150	1325	1345	1370	1400						2650	292	292
	6" FP 150	2200	2494	2788	3081						4400	661	895
	8" FP 150	3300	3580	3860	4140						6600	661	895
	10" FP 150	4400	5059	5718	6377						8800	988	1625
	12" FP 150	4950	8300	11650	15000						9900	988	1625
87A-700s 88A-740s	1-1/2" SP 300	132	144	155	167	178	190	201	213	217	264	68	68
	2" SP 300	176	193	211	228	245	262	280	297	304	352	96	96
	2-1/2" SP 300	231	254	277	300	323	346	369	392	401	462	127	127
	3" SP 300	253	327	402	476	551	625	700	774	804	506	127	127
	4" SP 300	850	860	875	890	910	950	1030	1110	1142	1700	292	292
	6" SP 300	1325	1345	1370	1400	1430	1474	1615	1756	1812	2650	292	292
	8" SP 300	2200	2494	2788	3081	3375	3669	3963	4257	4374	4400	661	895
	10" SP 300	3300	3580	3860	4140	4420	4700	4980	5260	5372	6600	661	895
87A-900s 88A-940s	1/2" FP 300	22	22	22	22	23	23	23	23	23	44	45	45
	3/4" FP 300	39	43	47	51	55	59	63	67	69	77	68	68
	1" FP 300	132	144	155	167	178	190	201	213	217	264	68	68
	1-1/2" FP 300	176	193	211	228	245	262	280	297	304	352	96	96
	2" FP 300	231	254	277	300	323	346	369	392	401	462	127	127
	2-1/2" FP 300	253	327	402	476	551	625	700	774	804	506	127	127
	3" FP 300	850	860	875	890	910	950	1030	1110	1142	1700	292	292
	4" FP 300	1325	1345	1370	1400	1430	1474	1615	1756	1812	2650	292	292
	6" FP 300	2200	2494	2788	3081	3375	3669	3963	4257	4374	4400	661	895
	8" FP 300	3300	3580	3860	4140	4420	4700	4980	5260	5372	6600	661	895
	10" FP 300	4400	5059	5718	6377	7036	7696	8355	9014	9277	8800	988	1625
	12" FP 300	4950	8300	11650	15000	18349	21699	25049	28399	29739	9900	988	1625

FLANGED VALVES

TORQUE CONSTANTS

TORQUE CONSTANTS FOR APOLLO CLASS 600 FULL PORT FLANGED VALVES

SEAT MATERIAL	SIZE	WORKING PRESSURE (PSIG)								LSST*	-24 ADDER	-EF ADDER
		200	400	600	800	1000	1200	1400	1500			
Devlon V-API (-95)	1"	166	189	211	233	256	275	292	300	288	N/A	N/A
	1.5"	253	273	292	312	331	351	370	380	468	N/A	N/A
	2"	686	698	710	721	732	744	755	761	1350	N/A	N/A
	2.5"	1150	1190	1231	1272	1313	1353	1395	1415	2256	N/A	N/A
	3"	1893	2030	2167	2304	2440	2577	2714	2782	3512	N/A	N/A
	4"	2406	2681	2957	3232	3508	3784	4060	4197	4260	N/A	N/A
	6"	7935	8280	8625	8970	9135	9660	10005	10178	13638	N/A	N/A
	8"	8282	8868	9454	10041	10627	11213	11799	12092	15978	N/A	N/A
PEEK (-38)	1"	184	204	224	245	264	283	304	314	328	N/A	N/A
	1.5"	379	399	420	439	460	479	500	509	468	N/A	N/A
	2"	882	968	1054	1140	1225	1313	1399	1481	1323	N/A	N/A
	2.5"	1256	1320	1384	1448	1512	1576	1640	1672	2384	N/A	N/A
	3"	2378	2588	2797	3007	3217	3427	3637	3741	4336	N/A	N/A
	4"	5771	6832	7892	8952	10012	11073	12133	12663	9422	N/A	N/A
	6"	6983	8675	10368	12061	13753	15446	17139	17985	10580	N/A	N/A
	8"	8586	12822	17058	21294	25531	29767	34003	36121	12936	N/A	N/A
UHMWPE (-21)	1"	155	178	201	219	222	224	228	228	264	N/A	N/A
	1.5"	211	245	280	305	310	315	318	318	352	N/A	N/A
	2"	428	454	479	505	531	556	582	594	806	N/A	N/A
	2.5"	447	467	486	506	525				875	N/A	N/A
	3"	1139	1224	1310	1396	1482				2106	N/A	N/A
	4"	1506	1638	1820	2002	2184				2600	N/A	N/A
	6"	3133	3487	3842						5558	N/A	N/A
	8"	3814	4354	4894						7088	N/A	N/A
Multiseal (-80)	1"	155	180	205	222	227	231	233	234	264	102	102
	1.5"	213	245	280	308	316	322	326	326	354	144	144
	2"	313	356	400	444	487	531	575	597	538	191	191
	2.5"	410	437	465	493	520				791	191	191
	3"	875	890	1030	1151	1228				1112	292	292
	4"	1506	1584	1683	1781	1880				2776	292	292
	6"	2788	3375	3963						4824	661	895
	8"	4836	5175	5514						8993	988	1625

Caution: For torque constants in the highlighted areas, manual valve operation is not suggested. Automated and gear operated assembly options are available. All values are stated in (in-lb)

BALL VALVES

TORQUE CONSTANTS

BALL VALVE TORQUE ADJUSTMENT FACTORS

PROVISION	CONDITION	FACTOR
TYPE OF OPERATION	ON/OFF SERVICE	0
	MODULATING SERVICE	0.25
PROCESS MEDIA	LIQUID, CLEAN PARTICLE FREE	0
	LIQUID, DIRTY, SLURRY, RAW WATER	0.3 to 0.8
	LIQUID, BLACK LIQUOR, LIME SLURRY	0.8
	LIQUID, OIL, LUBRICATING	0
	LIQUID, VISCOUS, MOLASSES	0.3
	GAS, CLEAN & WET	0
	GAS, DRY	0.3 to 0.5
	GAS, DIRTY, AIR SLURRY, NATURAL GAS	0.5 to 1
	OXYGEN, CHLORINE	0.5
	SUPERHEATED STEAM, SATURATED STEAM	Refer to Process Temp.
FREQUENCY OF OPERATION**	ONCE PER DAY OR MORE	0
	ONCE PER WEEK	0.2
	ONCE PER MONTH	0.5
	Less than once per month (LSST)	1
PROCESS TEMPERATURE	APPLICATIONS ABOVE 225 DEG F	0.50
	APPLICATIONS BELOW -20 DEG F	0.25
VALVE SEATING MATERIAL	PTFE	0
	*MULTIFILL	0
	*PEEK	Contact Factory
	*UHMWPE	Contact Factory
OPTION -49 -57 -67 -90	LIVE LOADED VALVES	0.2
	ASSEMBLED DRY	0.3
	OXYGEN CLEANED	0.3
	CLEANED FOR INDUSTRIAL GAS	0.3
	DOUBLE PACKED EXTENDED BONNET	0.2
CUSTOMER SPECIFIED	PRESCRIBED SAFETY FACTOR	0.2 to 2

*Do not consider when calculating Top Entry Valve Torques. Apply all applicable torque adjustment factors to the valve
** If accounting for LSST, disregard frequency of operation.

Example:
To find adjusted torque:
1" 76-AR5-64 used on Oxygen service once per week to once per month. Find the torque constant of the valve at 200 psig DP, then add together the adjustment factors, and add 1 to that number. Then multiply the sum of the adjustment times the torque.
86" lb x (.5 + .5 + 1) = 172" lb. adjusted torque.

TORQUE CONSTANTS FOR TOP ENTRY BALL VALVES

SEATS	VALVE SIZE STD. PORT (INCHES)	VALVE SIZE FULL PORT (INCHES)	DIFFERENTIAL PRESSURES (PSIG)					LSST*	GRAFOIL® ADDER	-EF ADDER
			100	285	500	740	1480			
5 6** C D G L M U**	1/2 thru 1	1/2 thru 3/4	85	110	140	180	290	170	68	68
	1-1/2	1	205	260	330	415	660	410	96	96
	2	1-1/2	350	430	550	735	1,200	700	127	127
	3	2	950	1,250	1,650	2,000	3,200	1,900	292	292
	4	3	2,000	2,500	3,300	4,100	6,500	4,000	292	292
	6††	4††	5,300	6,700	8,200	11,400	18,000	10,600	661	895
	8††	6††	11,000	14,000	18,500	25,000	36,000	22,000	661	895
	10††	8††	18,500	22,000	30,000	40,000	62,000	37,000	988	1625
4 8 9 B H N	1/2 thru 1	1/2 thru 3/4	115	160	210	260	450	230	68	68
	1-1/2	1	270	370	480	590	1,000	540	96	96
	2	1-1/2	475	650	860	1,050	1,750	950	127	127
	3	2	1,250	1,850	2,400	2,950	4,900	2,500	292	292
	4††	3††	2,700	3,700	4,900	5,900	10,000	5,400	292	292
	6††	4††	7,410	10,100	13,400	16,400	25,300	14,800	661	895
	8††	6††	15,000	20,000	26,000	34,500	56,000	30,000	661	895
	10††	8††	25,000	32,000	45,000	60,000	96,000	50,000	988	1625

*LSST - Long Stand Still Torque
**Rated torque for #6 and U seat add 30%
†Rated torque for #9 ceramic seat is to be increased by 10%
††Gear operator or actuation recommended

BUTTERFLY VALVE ACTUATOR SIZING PROCEDURES

DOUBLE ACTING ACTUATOR:

AIR TO OPEN, AIR TO CLOSE

- Choose an actuator whose output torque at the given air supply is greater than the butterfly valve's seating/unseating torque.
- Unseating torque is also known as the breakaway torque
- Seating torque is also known as the closing torque

SPRING RETURN FAIL CLOSED:

AIR TO OPEN, SPRING TO CLOSE

- Select an actuator whose ending spring stroke is greater than the butterfly valve's seating/unseating torque.
- Select an actuator whose starting air stroke is greater than the butterfly valve's seating/unseating torque at the given air supply pressure.
- Above must be found on the same spring set line.

SPRING RETURN FAIL OPEN:

AIR TO CLOSE SPRING TO OPEN

- Select an actuator whose end of air stroke is greater than the butterfly valve's seating/unseating torque at the given air supply pressure.
- Select an actuator whose start of spring stroke is greater than the butterfly valve's seating/unseating torque.
- Above must be found on the same spring set line. See Actuator Part Numbering System-"F" Suffix for Fail Open

FACTORS AFFECTING SEATING AND UNSEATING TORQUE AND APPLICATION GUIDELINES

OPERATING FREQUENCY

- The first operation of a valve after a sustained period of closure will require above normal torque.

LUBRICATING CHARACTERISTICS OF FLOW MEDIA

- Judge your flow media on this basis-better than or worse than water. Examples of lubricating media are: water, lubricating oils, aqueous process flow, beverage service, etc. Examples of non-lubricating media are: air, dry gases, dry bulk services, solvents, diesel oil, etc.

CONDITION OF DISC EDGE AND SEAT

- An iron disc in corrosive service will corrode. This corrosion deposits a build-up on the disk edge and raises required torque. Similar flow media deposits on the seat material can increase torque or prevent proper valve operation.

TEMPERATURE EXTREMES

- Sustained operating temperatures approaching the upper or lower limits of the seat material will increase required torque. Refer to the seat temperature range on Apollo Butterfly Valve Seat Materials page in the catalog. Consult the factory for anticipated torque increase of certain seat materials due to temperature extremes.

ELASTOMER SWELL

- Certain elastomers tend to swell from contact with some chemicals. This elastomer swell will increase required torque.

The wide selection of Apollo Available Materials of Construction will allow you to choose the correct butterfly valve materials for your service. All of the above Torque Affecting Factors can be accommodated with the correct choice of materials. Consult the factory for assistance in choosing the correct torque value for your service.

NOTE: Please consult the material selection guide for trim recommendations. Please consult the factory for proper sizing of Apollo actuators.

BUTTERFLY VALVES

TORQUE CONSTANTS

RTFM & UHMWPE SEAT – TORQUE RATING (IN-LB)

SIZE	PSIG	CLASS 150				CLASS 300					CLASS 600					
		ΔP=100	ΔP=150	ΔP=200	ΔP=285	ΔP=100	ΔP=150	ΔP=200	ΔP=285	ΔP=740	ΔP=150	ΔP=500	ΔP=800	ΔP=1000	ΔP=1200	ΔP=1480
2"	in-lb	204	230	266	332	248	332	381	425	531	–	–	–	–	–	–
2.5"	in-lb	239	283	319	398	301	398	443	478	575	–	–	–	–	–	–
3"	in-lb	257	301	345	434	327	434	487	540	664	407	513	841	974	1,106	1,283
4"	in-lb	398	469	531	664	469	664	761	867	1,106	620	841	1,540	1,823	2,106	2,487
5"	in-lb	558	655	743	929	620	885	1,062	1,239	1,664	–	–	–	–	–	–
6"	in-lb	726	850	974	1,212	858	1,221	1,505	1,779	2,460	974	1,363	2,593	3,089	3,575	4,248
8"	in-lb	1,328	1,549	1,770	2,213	1,646	2,354	2,921	3,487	4,868	1,912	2,673	5,080	6,045	7,009	8,319
10"	in-lb	2,213	2,575	2,947	3,682	2,575	3,682	4,691	5,699	8,142	3,177	4,437	8,434	10,036	11,638	13,806
12"	in-lb	2,867	3,345	3,823	4,779	3,629	5,177	6,522	7,877	11,151	4,788	6,682	12,709	15,116	17,523	20,798
14"	in-lb	4,938	5,761	6,584	8,231	6,053	8,646	11,186	13,735	19,913	–	–	–	–	–	–
16"	in-lb	6,903	8,054	9,204	11,505	8,461	12,080	14,788	17,496	24,072	–	–	–	–	–	–
18"	in-lb	9,717	11,337	12,956	16,196	11,903	17,010	20,461	23,913	32,303	–	–	–	–	–	–
20"	in-lb	12,930	15,089	17,240	21,550	15,842	22,629	26,816	30,993	41,153	–	–	–	–	–	–
24"	in-lb	19,859	23,169	26,479	33,099	24,329	34,754	40,595	46,436	60,623	–	–	–	–	–	–
30″	in-lb	30,090	35,400	40,710	49,472	–	–	–	–	–	–	–	–	–	–	–
36"	in-lb	48,233	58,145	68,057	84,849	–	–	–	–	–	–	–	–	–	–	–

FIRE SAFE SEAT – TORQUE RATING (IN-LB)

SIZE	PSIG	CLASS 150				CLASS 300					CLASS 600					
		ΔP=100	ΔP=150	ΔP=200	ΔP=285	ΔP=100	ΔP=150	ΔP=200	ΔP=285	ΔP=740	ΔP=150	ΔP=500	ΔP=800	ΔP=1000	ΔP=1200	ΔP=1480
2"	in-lb	434	504	584	726	504	726	770	814	929	–	–	–	–	–	–
2.5"	in-lb	460	540	620	770	540	770	823	885	1,018	–	–	–	–	–	–
3"	in-lb	584	681	779	974	681	974	1,035	1,097	1,257	866	1,208	1,549	1,788	2,027	2,354
4"	in-lb	708	832	947	1,186	832	1,186	1,248	1,319	1,478	1,402	1,887	2,372	2,797	3,230	3,814
5"	in-lb	965	1,124	1,283	1,602	1,133	1,620	1,894	2,177	2,850	–	–	–	–	–	–
6"	in-lb	1,345	1,566	1,788	2,239	1,584	2,257	2,531	2,805	3,478	3,758	4,485	5,213	6,204	7,186	8,531
8"	in-lb	2,089	2,443	2,788	3,487	2,513	3,584	4,160	4,735	6,133	7,077	8,455	9,832	11,691	13,558	16,089
10"	in-lb	3,283	3,832	4,381	5,478	4,027	5,753	6,673	7,602	9,841	11,400	13,616	15,833	18,833	21,833	25,913
12"	in-lb	5,168	6,036	6,894	8,620	6,230	8,894	10,470	12,045	15,877	17,542	20,949	24,355	28,975	33,595	39,869
14"	in-lb	6,912	8,062	9,213	11,514	8,363	11,948	14,426	16,904	22,913	–	–	–	–	–	–
16"	in-lb	8,770	10,231	11,700	14,620	10,655	15,222	18,682	22,152	30,559	–	–	–	–	–	–
18"	in-lb	12,567	14,664	16,762	20,948	15,178	21,683	27,541	33,409	47,640	–	–	–	–	–	–
20"	in-lb	16,859	19,674	22,479	28,099	20,196	28,851	37,993	47,126	69,322	–	–	–	–	–	–
24"	in-lb	25,072	29,249	33,426	41,781	30,046	42,923	56,622	70,331	103,607	–	–	–	–	–	–

METAL SEAT – TORQUE RATING (IN-LB)

SIZE	PSIG	CLASS 150				CLASS 300					CLASS 600					
		ΔP=100	ΔP=150	ΔP=200	ΔP=285	ΔP=100	ΔP=150	ΔP=200	ΔP=285	ΔP=740	ΔP=150	ΔP=500	ΔP=800	ΔP=1000	ΔP=1200	ΔP=1480
2"	in-lb	478	558	637	797	558	797	850	903	1,027	–	–	–	–	–	–
2.5"	in-lb	513	593	681	850	593	850	912	974	1,124	–	–	–	–	–	–
3"	in-lb	637	743	850	1,062	743	1,062	1,133	1,204	1,381	832	1,035	1,699	1,965	2,230	2,593
4"	in-lb	797	929	1,062	1,328	929	1,328	1,398	1,460	1,628	1,496	2,018	3,708	4,381	5,053	5,965
5"	in-lb	1,062	1,239	1,416	1,770	1,248	1,788	2,089	2,398	3,133	–	–	–	–	–	–
6"	in-lb	1,487	1,735	1,982	2,478	1,770	2,522	2,814	3,106	3,823	2,947	4,106	7,815	9,301	10,788	12,797
8"	in-lb	2,257	2,637	3,009	3,761	2,726	3,894	4,540	5,177	6,744	4,443	6,204	11,797	14,036	16,275	19,311
10"	in-lb	3,797	4,434	5,052	6,328	4646	6,638	7,584	8,531	10,824	6,558	9,151	17,417	20,718	24,019	28,506
12"	in-lb	5,947	6,938	7,930	9,912	7,558	10,797	12,302	13,815	17,470	11,001	15,364	29,223	34,772	40,321	47,843
14"	in-lb	8,655	10,098	11,540	14,426	10,841	15,488	18,196	20,904	27,488	–	–	–	–	–	–
16"	in-lb	10,965	12,797	14,620	18,275	14,249	20,355	23,691	27,037	35,143	–	–	–	–	–	–
18"	in-lb	15,718	18,337	20,957	26,196	19,514	27,878	33,949	40,029	54,782	–	–	–	–	–	–
20"	in-lb	21,081	24,594	28108	35,135	25709	36,728	45,648	54,578	76,252	–	–	–	–	–	–
24"	in-lb	31,382	36,612	41,843	52,304	38,595	55,136	67,251	79,367	108,793	–	–	–	–	–	–

SEATING AND UNSEATING TORQUE APOLLO RESILIENT SEATED BUTTERFLY VALVES
WD141, LD141, WD145, LD145, LC149 SERIES

VALVE SIZE (IN.)	DIFFERENTIAL PRESSURE (PSID)			
	50 BUSHING PTFE	100 BUSHING PTFE	150 BUSHING PTFE	200 BUSHING PTFE
2	100	106	111	117
2 1/2	150	163	176	189
3	207	220	232	244
4	290	323	357	390
5	423	481	540	598
6	599	691	783	875
8	1060	1183	1307	1430
10	1671	1872	2074	2275
12	2568	2795	3023	3250
14	2640	3070	3500	-
16	4260	4880	5500	-
18	6287	7243	8200	-
20	8360	9180	10000	-
24	15427	16813	18200	-
30	31200	32550	33930	-

All torque values shown on chart are for wet (water and other non-lubricating media) on-off service. For dry (non-lubricating, dry gas media), multiply values by 1.15. For lubed service (clean, nonabrasive lubricating media), multiply values by 0.85.
Under certain conditions, hydrodynamic torque can meet or exceed seating and unseating torques. When designing valve systems, hydrodynamic torque must be considered to help ensure correct selection of actuation.

*ALL PUBLISHED BUTTERFLY TORQUE CHARTS HAVE NO BUILT-IN SAFETY FACTORS. A PRESCRIBED 25% SAFETY FACTOR IS RECOMMENDED!

PAGE	DATE	DESCRIPTION
R-27	03JUNE21	Replaced actuator photo with new product
		Revised heading to Stainless Steel Body and wording under it.
R-30	03JUNE21	Replaced images and dimensional chart with new information
R-41	31AUG17	Removed -32A Solenoids and -32B Adapter
R-50	13APR17	Changed torque values for 2.5" & 3", standard port valves shown in table's top section (70-64x… 399-10x)
R-51, R-52	04MAY17	Added -EF torque adder
R-53	04MAY17	Added -EF torque adder
		Changed 3" & larger standard port Grafoil adders